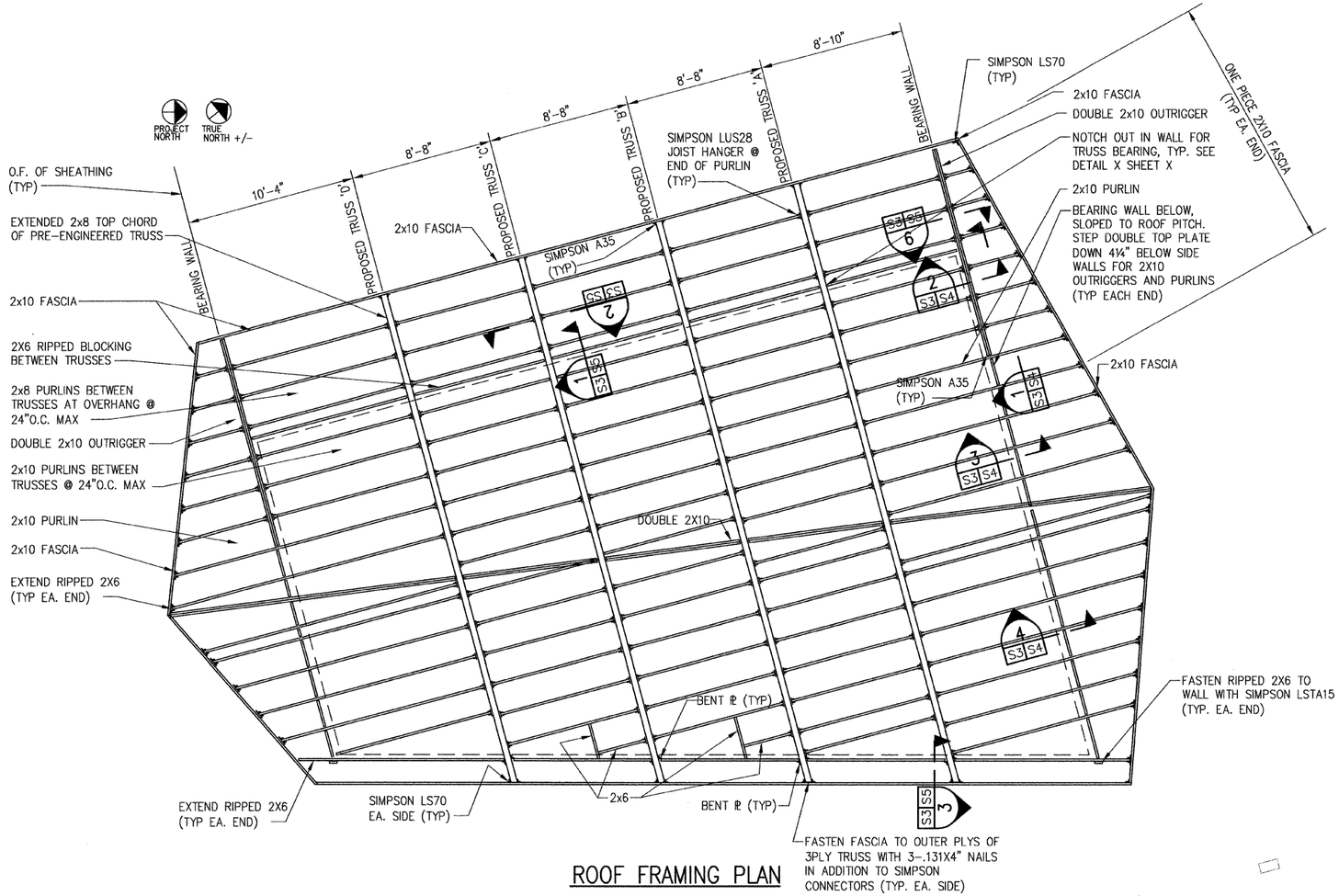

ROOF FRAMING PLAN

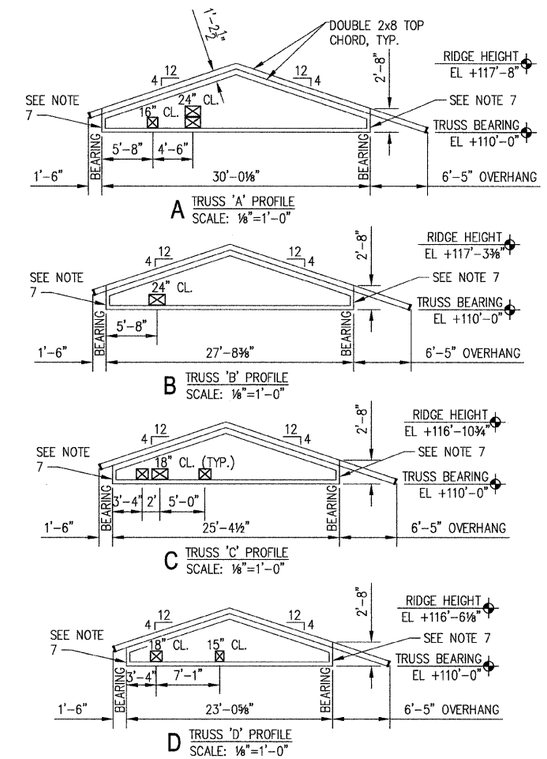

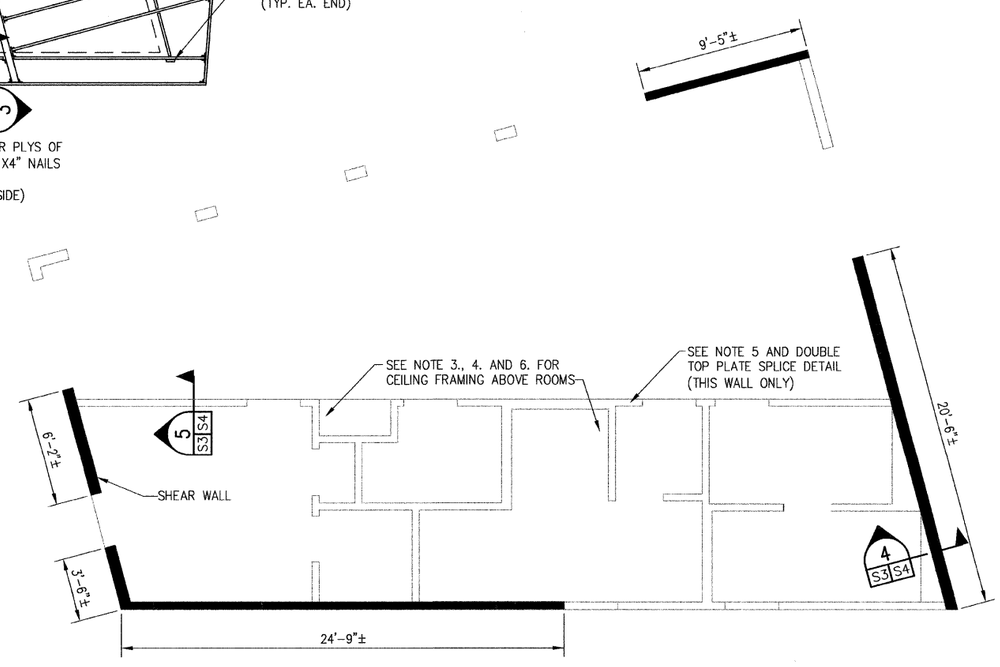

SHEAR WALL PLAN

NOTES:

1. SEE SHEET A2.3 FOR PROPOSED TRUSS TYPES A,B,C&D.
2. TRUSSES TO BE 3 PLY.
3. FRAME CIELING WITH 2X6 NO. 2 SPF BETWEEN TRUSSES. FRAME TO TRUSSES AT EACH END WITH SIMPSON LUS26.
4. INSTALL ALL WOOD STRUCTURAL PANEL SHEATHING BEFORE FRAMING WALLS EXCEPT AS STIPULATED IN NOTE 5.
5. FRAME THIS WALL BEFORE INSTALLING WOOD STRUCTURAL PANEL SHEATHING ON CEILING.
6. ALL CEILING STRUCTURAL WOOD PANEL EDGES THAT ARE NOT ATTACHED TO FRAMING OR NAILERS SHALL BE BACKED WITH 2X4 WOOD BLOCKING AND FASTENED WITH .131X2½" NAILS.
7. END POSTS OF TRUSSES SHALL BE 2X6 MIN.

THOUVENOT, WADE & MOERCHEN, INC.
ENGINEERS ◆ SURVEYORS ◆ PLANNERS

☐ CORPORATE OFFICE
4940 OLD COLLINSVILLE RD.
SWANSEA, ILLINOIS 62226
TEL (618) 624-4488
FAX (618) 624-6688
corp@twm-inc.com

☒ WATERLOO OFFICE
113 SOUTH MAIN STREET
WATERLOO, ILLINOIS 62298
TEL (618) 939-5050
FAX (618) 939-3938
waterloo@twm-inc.com

☐ EDWARDSVILLE OFFICE
1015B CENTURY DRIVE
EDWARDSVILLE, ILLINOIS 62025
TEL (618) 656-4040
FAX (618) 656-4343
edwardsville@twm-inc.com

☐ ST. LOUIS OFFICE
1001 CRAIG ROAD, SUITE 260
ST. LOUIS, MISSOURI 63146
TEL (314) 236-5052
FAX (314) 872-2194
stlouis@twm-inc.com

PROFESSIONAL REGISTRATIONS	LICENSE NO.
ILLINOIS PROFESSIONAL DESIGN FIRM	184-001220
PROFESSIONAL ENGINEERING CORP.	62-035370
PROFESSIONAL STRUCTURAL ENGR. CORP.	81-005202
ILLINOIS PROF. LAND SURVEYING CORP.	048-000029
MISSOURI PROFESSIONAL ENGR. CORP.	NC 001528
MISSOURI LAND SURVEYING CORP.	NC 000346

SEAL

Signature:
Signature Date:
Expiration Date:

STATEMENT OF RESPONSIBILITY

I hereby confirm that the document herein to be authenticated by my seal is restricted to this sheet, and I hereby disclaim any responsibility for all other drawings, specifications, estimates, reports or other documents or instruments relating to or intended to be utilized for any other part of the architectural, engineering or survey project.

TITLE: ROOF FRAMING PLAN AND SHEAR WALL PLAN

PROJECT: CHESTER WELCOME CENTER

REV.	DATE	DESCRIPTION
1	12/16/08	REVISIONS PER IDOT COMMENTS

DRAWN BY:	DJH
DESIGNED BY:	DJH
CHECKED BY:	KPC
APPROVED BY:	KPC
PROJECT NUMBER	T33050421

SHEET S3 OF 9 SHEETS

PROJECT DESCRIPTION

☒ ISSUED FOR REVIEW ☐ ISSUED FOR BIDDING
☐ ISSUED FOR CONSTR. ☐ RECORD DRAWING

H:\AutoCAD\borders\TWM20362D\S4.dwg 12/7/2006 9:35:09 AM CST