STATE OF ILLINOIS
DEPARTMENT OF TRANSPORTATION

ROUTE NO.	SECTION	COUNTY	TOTAL SHEETS	SHEET NO.
F.A.P. 308	*	ROCK ISLAND	210	95
FED. ROAD DIST. NO. 7	ILLINOIS	FED. AID PROJECT-		

SHEET NO. 11
31 SHEETS

Contract #64814 * 1(HB,HB-1,VB,HB-2)R

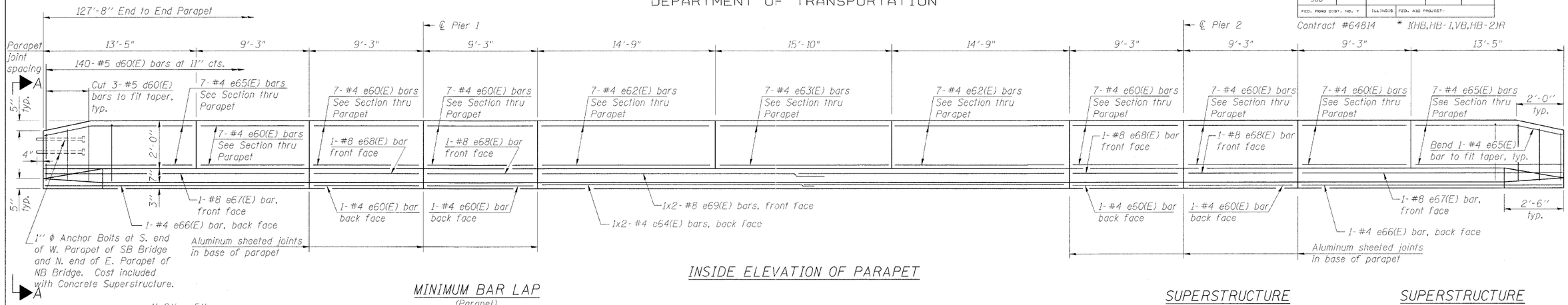

INSIDE ELEVATION OF PARAPET

MINIMUM BAR LAP
(Parapet)
#4 bar = 1'-4"
#8 bar = 3'-5"

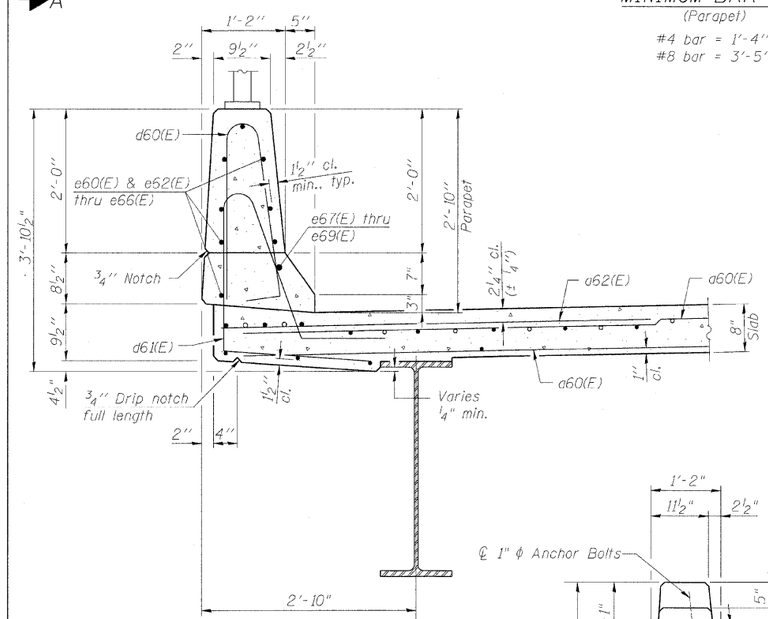

SECTION THRU PARAPET

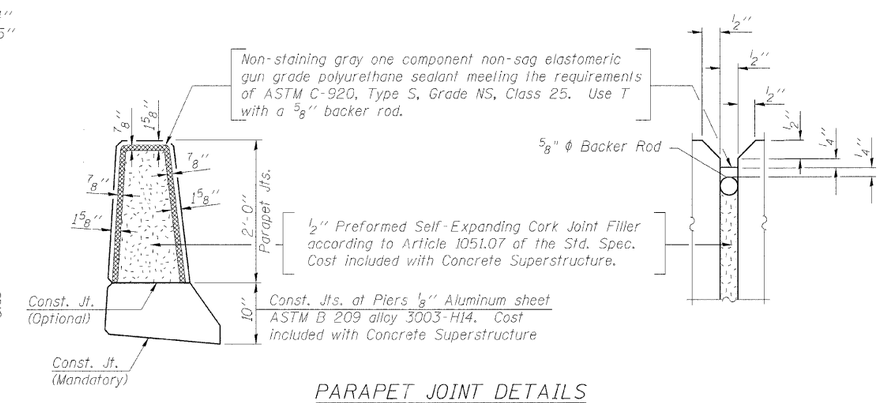

PARAPET JOINT DETAILS

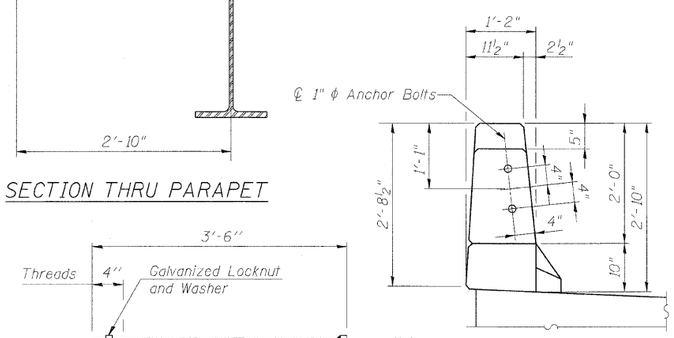

VIEW A-A

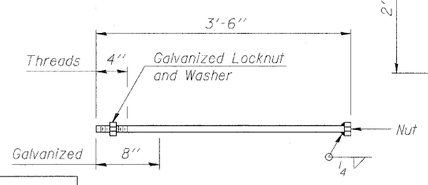

1" ϕ ANCHOR BOLT

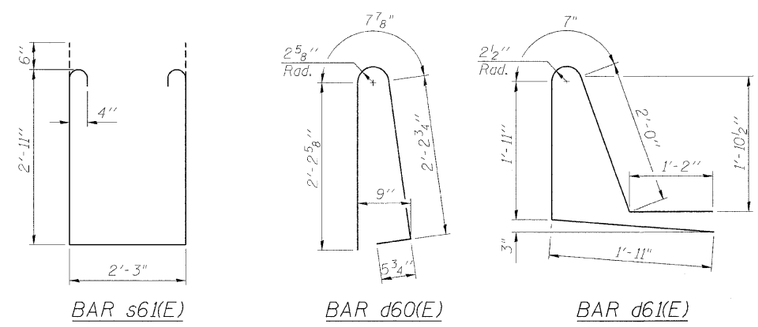

BAR s61(E) BAR d60(E) BAR d61(E)

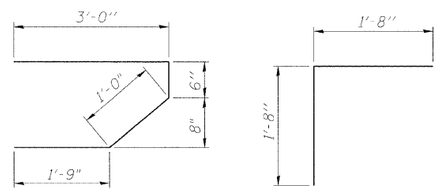

BAR s60(E) BAR v60(E)

SUPERSTRUCTURE
BILL OF MATERIAL NB

Bar	No.	Size	Length	Shape
d60(E)	390	#5	42'-6"	
d62(E)	220	#6	6'-0"	
d63(E)	4	#5	46'-3"	
b60(E)	230	#5	27'-3"	
b61(E)	86	#6	30'-4"	
b62(E)	246	#5	23'-1"	
d60(E)	280	#5	5'-7"	
d61(E)	280	#5	7'-7"	
e60(E)	92	#4	8'-11"	
e62(E)	28	#4	14'-5"	
e63(E)	14	#4	15'-6"	
e64(E)	4	#4	23'-4"	
e65(E)	28	#4	13'-1"	
e66(E)	4	#4	22'-4"	
e67(E)	4	#8	22'-4"	
e68(E)	8	#8	8'-11"	
e69(E)	4	#8	24'-5"	
m60(E)	10	#6	46'-3"	
m61(E)	24	#6	11'-0"	
m62(E)	10	#6	7'-9"	
m63(E)	4	#6	2'-8"	
s60(E)	92	#5	6'-3"	
s61(E)	82	#4	9'-1"	
v60(E)	82	#5	3'-4"	
Reinforcement Bars, Epoxy Coated		Pound	44,310	
Concrete Superstructure		Cu. Yds.	201.9	

SUPERSTRUCTURE
BILL OF MATERIAL SB

Bar	No.	Size	Length	Shape
d60(E)	390	#5	42'-6"	
d62(E)	220	#6	6'-0"	
d63(E)	4	#5	46'-3"	
b60(E)	230	#5	27'-3"	
b61(E)	86	#6	30'-4"	
b62(E)	246	#5	23'-1"	
d60(E)	280	#5	5'-7"	
d61(E)	280	#5	7'-7"	
e60(E)	92	#4	8'-11"	
e62(E)	28	#4	14'-5"	
e63(E)	14	#4	15'-6"	
e64(E)	4	#4	23'-4"	
e65(E)	28	#4	13'-1"	
e66(E)	4	#4	22'-4"	
e67(E)	4	#8	22'-4"	
e68(E)	8	#8	8'-11"	
e69(E)	4	#8	24'-5"	
m60(E)	10	#6	46'-3"	
m61(E)	24	#6	11'-0"	
m62(E)	10	#6	7'-9"	
m63(E)	4	#6	2'-8"	
s60(E)	92	#5	6'-3"	
s61(E)	82	#4	9'-1"	
v60(E)	82	#5	3'-4"	
Reinforcement Bars, Epoxy Coated		Pound	44,310	
Concrete Superstructure		Cu. Yds.	201.9	

NOTES

1. Bars indicated thus 1x2-#5 etc. indicates 1 line of bars with 2 lengths per line.
2. All edges shall have a ¾" chamfer except as noted.

DESIGNED	CMM
CHECKED	JSD
DRAWN	EF
CHECKED	RWC

LOCHNER
H.W. LOCHNER, INC., CHICAGO, ILLINOIS

PARAPET DETAILS
IL ROUTE 92 (CENTENNIAL EXPRESSWAY)
OVER 31st AVENUE
FAP ROUTE 308 SEC. 1(HB-2)R
ROCK ISLAND COUNTY
STATION 1470+70.31
STRUCTURE NO. 081-0172 (SB)
STRUCTURE NO. 081-0173 (NB)

t:\2082\structdgn\Z044023PD1.dgn