Bench Mark: B.M. #498 - Chiseled square on top of Northeast wingwall
Sta. 1518+55, 36' Rt. of IL-92, Elev. 583.13

Existing Structure: S.N. 081-0063, Built as F.A. Route 199, Sec. 1-HB-1 in 1963.
Three span, 129'-3" back to back of abutments, 66'-9" out to out. Superstructure consists of a R.C. deck on WF beams supported on multi-column piers and spill-through abutments. Structure to be removed and replaced. Traffic to be maintained during the reconstruction by staged construction.

No Salvage

STATE OF ILLINOIS
DEPARTMENT OF TRANSPORTATION

ROUTE NO.	SECTION	COUNTY	TOTAL H-BKTS	SHEET NO.
F.A.P. 308	*	ROCK ISLAND	210	148
FED. ROAD DIST. NO. 7		ILLINOIS	FED. AID PROJECT-	

SHEET NO. 1
28 SHEETS

Contract #64814 * I(HB,HB-1,VB,HB-2)R

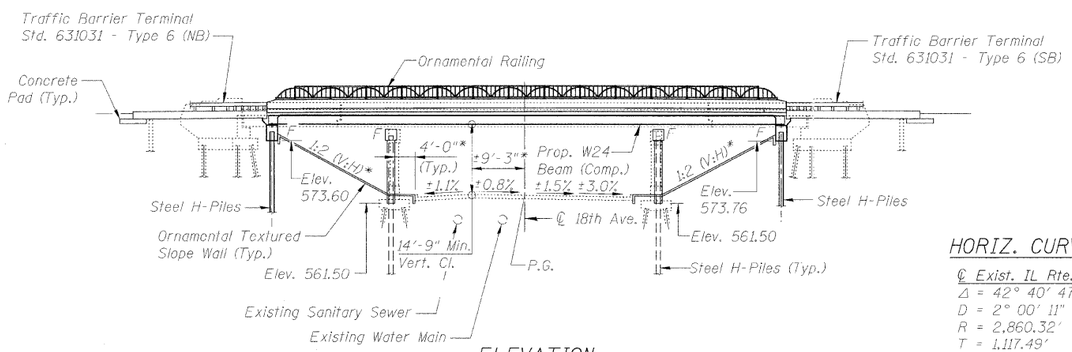

ELEVATION

* At Right Angles to ℄ 18th Avenue

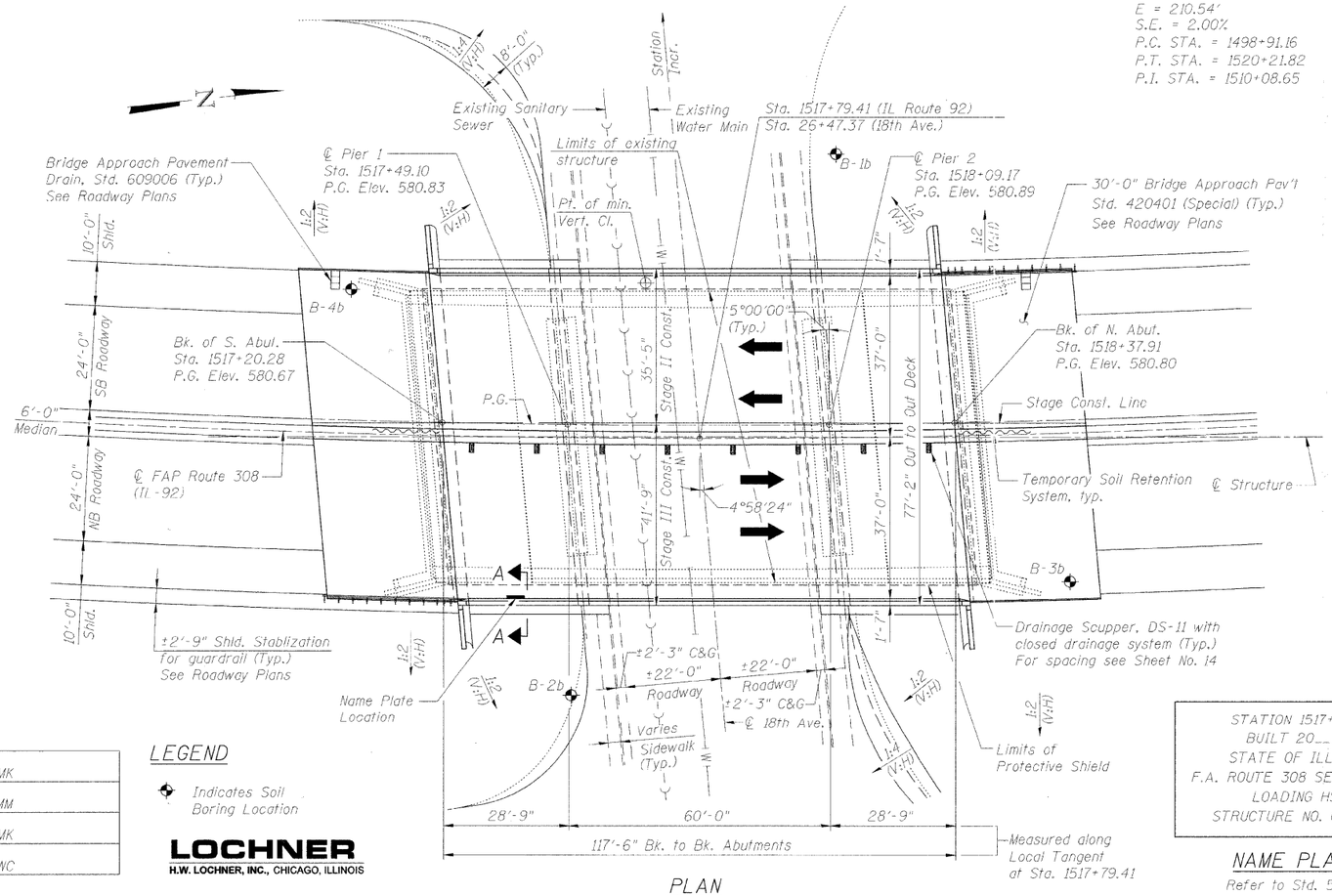

PLAN

HORIZ. CURVE DATA

℄ Exist. IL Rte. 92
Δ = 42° 40' 47" (LT)
D = 2° 00' 11"
R = 2,860.32'
T = 1,117.49'
L = 2,130.66'
E = 210.54'
S.E. = 2.00%
P.C. STA. = 1498+91.16
P.T. STA. = 1520+21.82
P.I. STA. = 1510+08.65

APPROVED
FOR STRUCTURAL ADEQUACY ONLY
Richard A. Cadwallader
ENGINEER OF BRIDGES AND STRUCTURES

STATE OF ILLINOIS RICHARD W. CHOTTINER 081-004859 EXP. 11/30/08 CHICAGO, ILLINOIS STRUCTURAL ENGINEER
Richard Chotiner 12/6/07
SHEETS 1-19, 22-28

LICENSED STRUCTURAL ENGINEER JAMES D. GALINSKY 081-005745 CHICAGO ILLINOIS STATE OF ILLINOIS
12/5/07
EXP. 11/30/08
SHEETS 20, 21

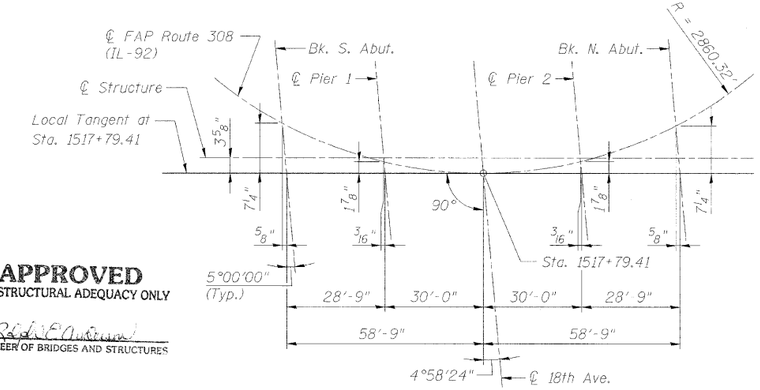

OFFSET SKETCH

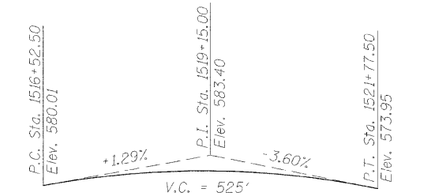

PROPOSED PROFILE GRADE
IL-ROUTE 92

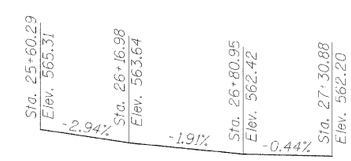

EXISTING PROFILE GRADE
18th AVENUE

LOADING HS20-44

Allow 50#/sq. ft. for Future Wearing Surface.

DESIGN SPECIFICATIONS

2002 AASHTO - 17th Edition

DESIGN STRESSES

FIELD UNITS

f'_c = 3,500 psi
f_y = 60,000 psi (reinforcement)
f_y = 50,000 psi (Struct. Steel) (M270 Grade 50)

SEISMIC DATA

Seismic Performance Category (SPC) = A
Bedrock Acceleration Coefficient (A) = 0.034g
Site Coefficient (S) = 1.0

NOTES

1. For General Notes, Bill of Material and Index of Sheets see Sheet No. 2
2. For Section A-A see Sheet No. 3
3. For temporary sheet piling details see Sheet No. 4

LEGEND

Indicates Soil Boring Location

STATION 1517+79.41
BUILT 20__ BY
STATE OF ILLINOIS
F.A. ROUTE 308 SEC. 1(HB-1)R
LOADING HS20
STRUCTURE NO. 081-0171

NAME PLATE
Refer to Std. 515001

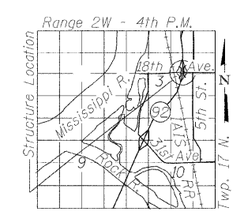

LOCATION SKETCH

GENERAL PLAN AND ELEVATION
IL ROUTE 92 (CENTENNIAL EXPRESSWAY)
OVER 18th AVENUE
FAP ROUTE 308 SEC. 1(HB-1)R
ROCK ISLAND COUNTY
STATION 1517+79.41
STRUCTURE NO. 081-0171

DESIGNED	AMK
CHECKED	CMM
DRAWN	AMK
CHECKED	RWC

LOCHNER
H.W. LOCHNER, INC., CHICAGO, ILLINOIS

t:\2082\structure\dgn\ZO44028GP1.dgn