CONTRACT NO. 66607

EarthTech
A Tyco International Ltd. Company

F.A.P. RTE.	SECTION	COUNTY	TOTAL SHEETS	SHEET NO.
786	(109) BR	LASALLE	351	191
STA.		TO STA.		
FED. ROAD DIST. NO.	ILLINOIS	FED. AID PROJECT		

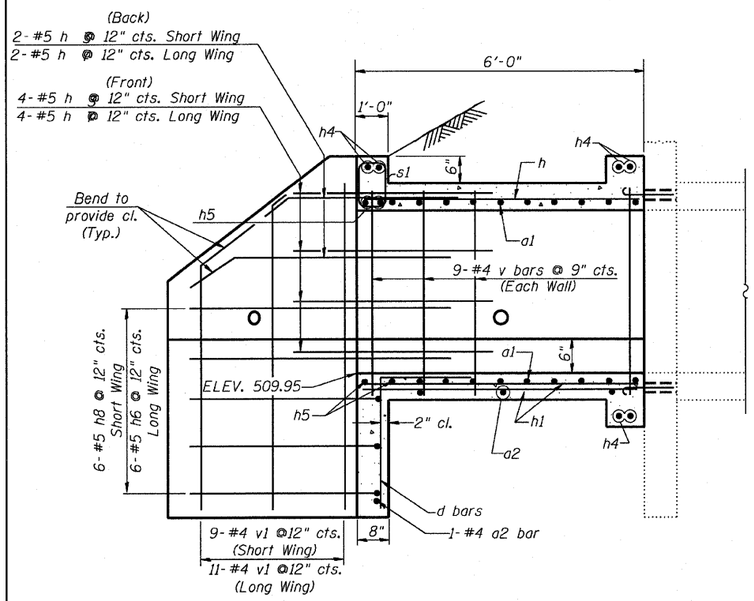

HALF LONG SECTION
N.T.S.

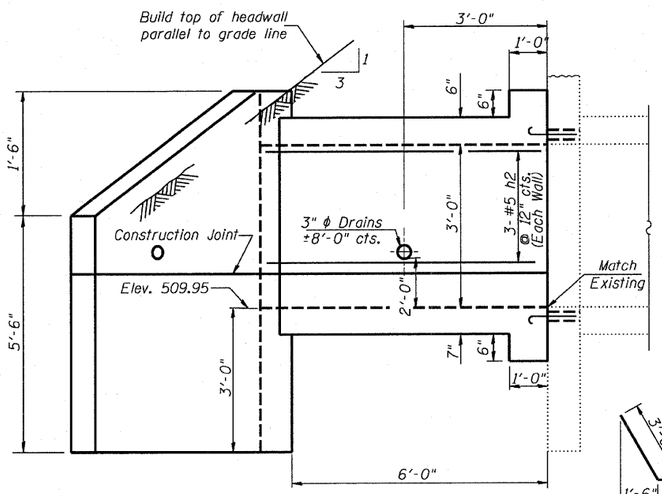

SHOWING OUTLINES
N.T.S.

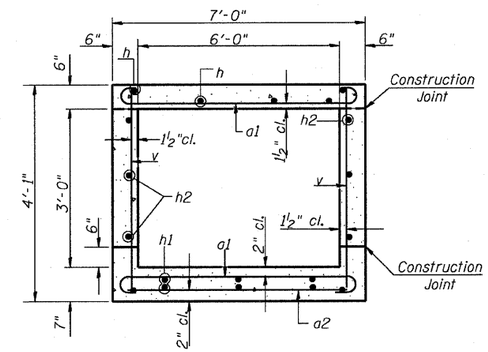

SECTION THRU BARREL
N.T.S.

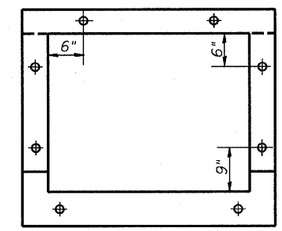

Sidewalls . . . . . 2 @ 21 " Cts.
Top & Bottom . . 5 @ 15 " Cts.

EXPANSION BOLT LOCATION
N.T.S.

Note: Expansion bolts shall consist of self drilling expansion shield and ¾" diameter hooked bolts. Hooked bolts shall extend a minimum of 9" into new concrete.
Minimum Certified Proof Load = 4,080 lbs

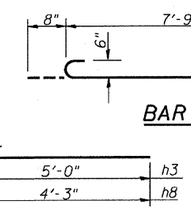

BAR a1

BARS h3 & h8

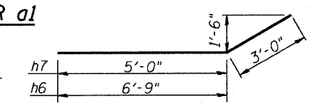

BARS h6 & h7

BILL OF MATERIAL

Bar	No.	Size	Length	Shape
a1	28	#6	9'-1"	
a2	6	#4	7'-9"	
d	7	#5	4'-6"	
h	9	#5	6'-8"	
h1	14	#4	6'-8"	
h2	6	#5	6'-8"	
h3	6	#5	8'-0"	
h4	6	#6	7'-9"	
h5	4	#6	7'-9"	
h6	6	#5	9'-9"	
h7	6	#5	8'-0"	
h8	6	#5	7'-3"	
v	20	#4	3'-9"	
v1	20	#4	6'-8"	
s1	8	#4	3'-9"	
Conc. Box Culv.			Cu. Yds.	5.0
Reinforcement Bars			Lbs	1,100
Expansion Bolts ¾" x 18"			Each	14

HALF ELEVATION

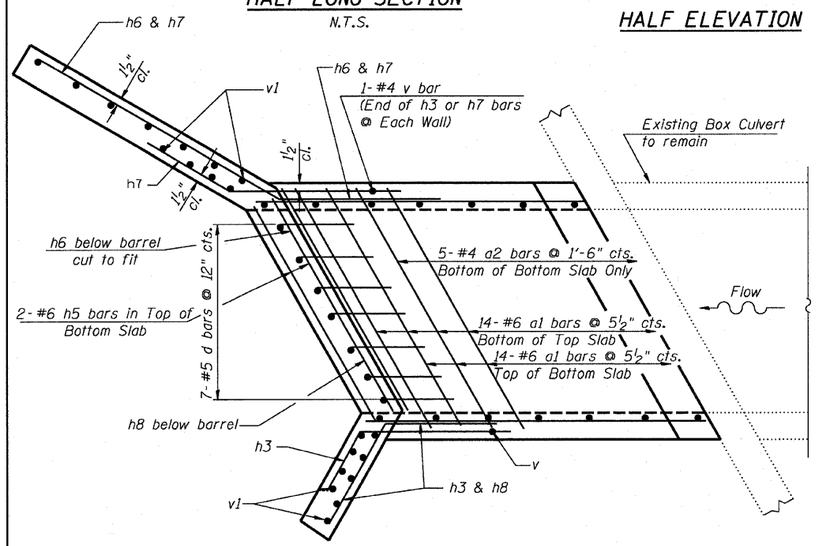

SHOWING REINFORCEMENT
N.T.S.

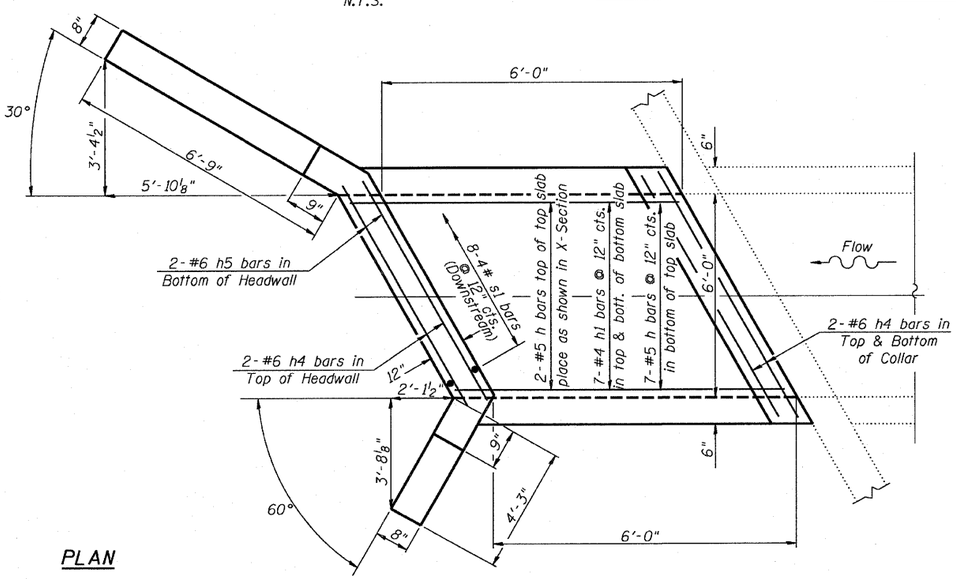

PLAN

SHOWING OUTLINES
N.T.S.

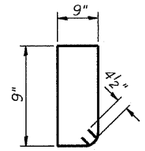

BAR s1
(Downstream)

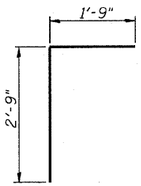

BAR d

GENERAL NOTES

Class SI Concrete shall be used throughout.
At least six feet of Barrel shall be poured monolithically with wingwalls.
Exposed edges shall be beveled ¾".
For backfilling and embankments see Standard Specifications.
Tilt hook of a1 bars, if necessary, to obtain 1½" minimum clearance at top of hook.

Reinforcement Bars shall conform to the requirements of AASHTO M-31, M-42 or M-53, Grade 60.

DESIGN STRESSES

fy= 60,000 p.s.i.
f'c= 3,500 p.s.i.

LOADING HS 20-44 & ALT.

REVISIONS	
NAME	DATE

ILLINOIS DEPARTMENT OF TRANSPORTATION

BOX CULVERT EXTENSION
STATION 96+45.63

SCALE:
DATE: JUNE 29, 2007
DRAWN BY JHR
CHECKED BY CLS

PLOT DATE = 10/4/2007
FILE NAME = $FILEL$
PLOT SCALE = $SCALE$
USER NAME = $USER$