STATE OF ILLINOIS
DEPARTMENT OF TRANSPORTATION

| ROUTE NO. | SECTION | COUNTY | TOTAL SHEETS | SHEET NO. |
|---|---|---|---|---|
| S.B.I. F.A.I. 255 | 60-8B-1I | Madison | 26 | 42 |
| FED. ROAD DIST. NO. 7 | | ILLINOIS | FED. AID PROJECT- | |

SHEET NO. 4
14 SHEETS

Contract # 76A25

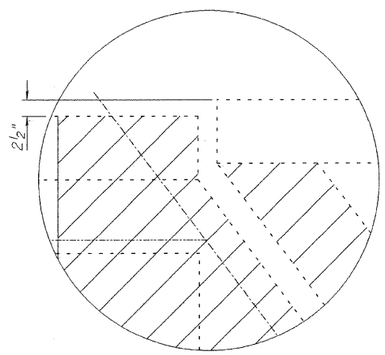


DETAIL A

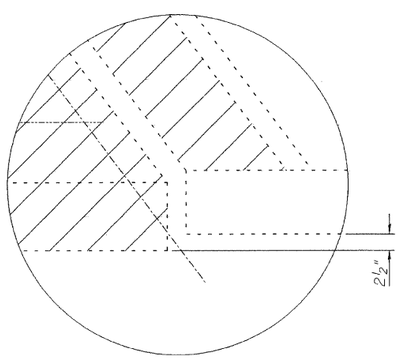


DETAIL B

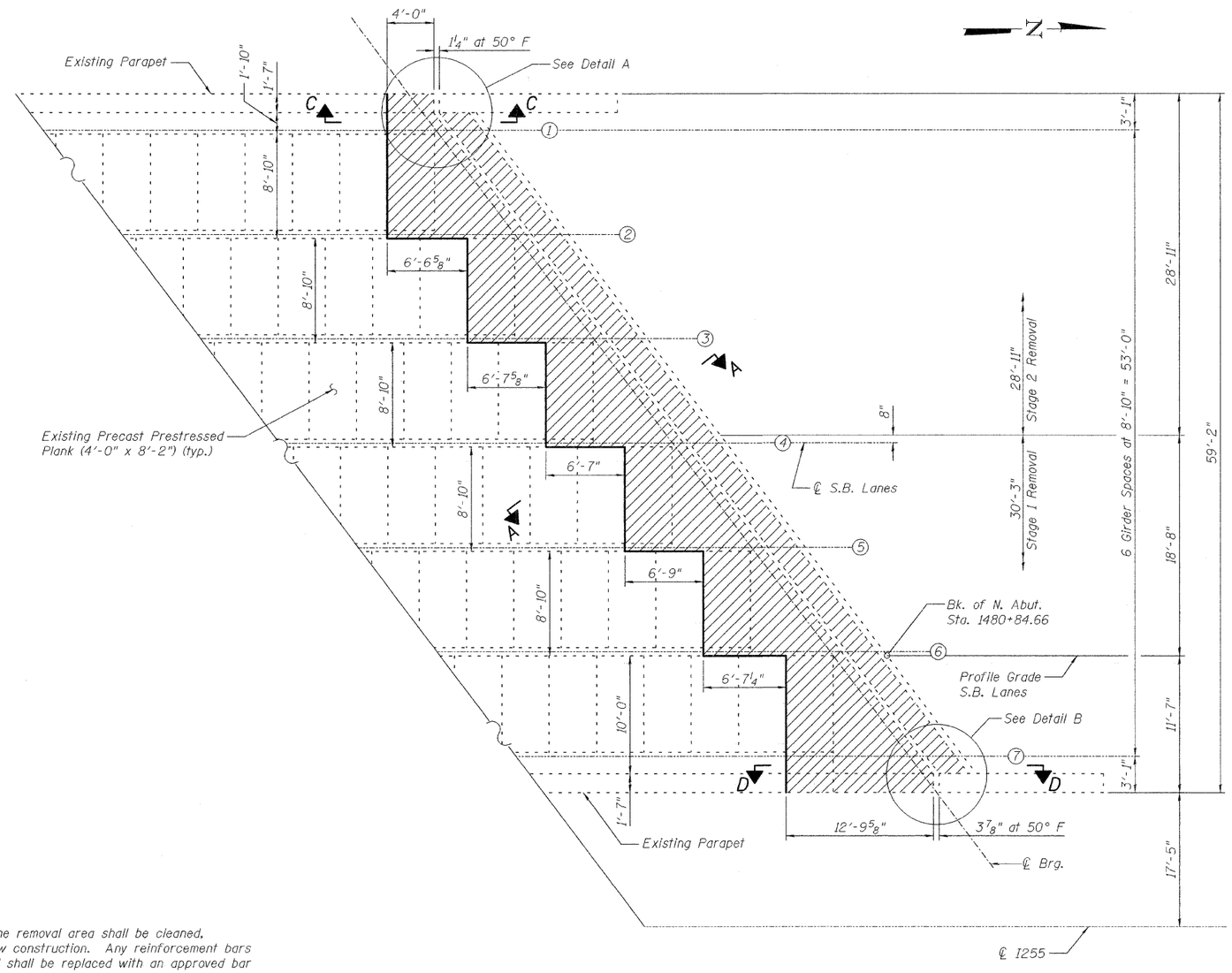


PARTIAL PLAN
at North Abut. S.B. Lanes

Notes:
Existing reinforcement extending into the removal area shall be cleaned, straightened and incorporated into the new construction. Any reinforcement bars that are damaged during concrete removal shall be replaced with an approved bar splicer or anchorage system. Cost shall be included with Concrete Removal.
Hatched areas indicate Concrete Removal.
Dimensions along outside parapets are measured along inside face of parapet.
See Sheet No. 9 of 14 for Superstructure Bill of Material.
See Sheet No. 11 of 14 for existing Section A-A.
Contractor shall verify location of existing precast prestressed plank joints prior to removal.
See Sheet No. 11 of 14 for concrete removal at North Abutment.
See Sheet No. 9 of 14 for View C-C & D-D.

| | |
|---|---|
| DESIGNED | DB |
| CHECKED | RS |
| DRAWN | CLS |
| CHECKED | WWH |

SUPERSTRUCTURE DECK AND
PARAPET REMOVAL SOUTHBOUND LANES
F.A.I. RTE. 255 OVER CAHOKIA CANAL
SECTION 60-8B-1I
STATION 1479+10.00
MADISON COUNTY
S.N. 060-0218 & 0219