F.A.U. RTE.	SECTION	COUNTY	TOTAL SHEETS	SHEET NO.
5345	04-00166-00-BR	DEKALB	39	15
STA. 14+00		TO STA. 23+00		
FED. ROAD DIST. NO.	ILLINOIS	FED. AID PROJECT		

CONTRACT NO. 87339

SLOPED METAL END SECTIONS WITH GRATE

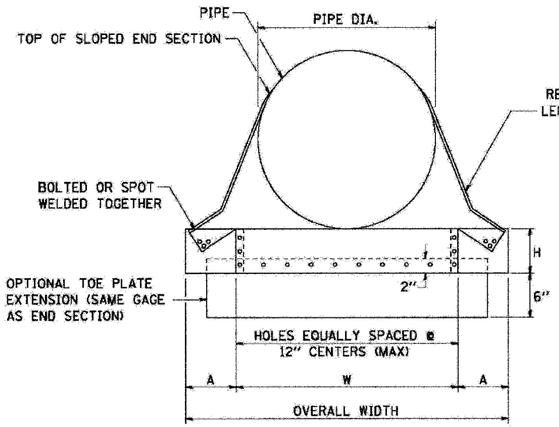

FRONT VIEW ROUND PIPE

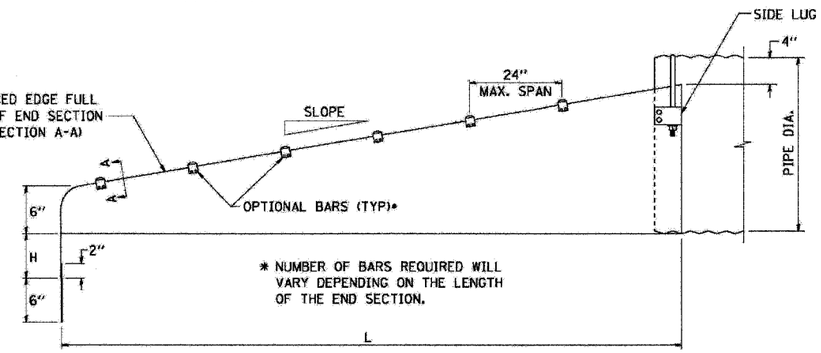

SIDE ELEVATION

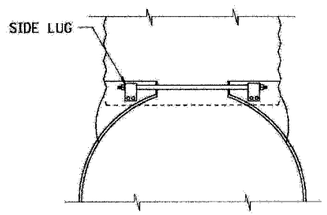

TYPE #2 CONNECTOR DETAILS (SHOWN)

TYPE #1 CONNECTOR DETAILS
THRU 24"
GALVANIZED STRAP

TYPE #2 CONNECTOR DETAILS (SHOWN)
FOR 30" AND LARGER
21" x 15" AND LARGER
1/2" THREADED ROD W/FLANGED NUT AND SIDE LUG

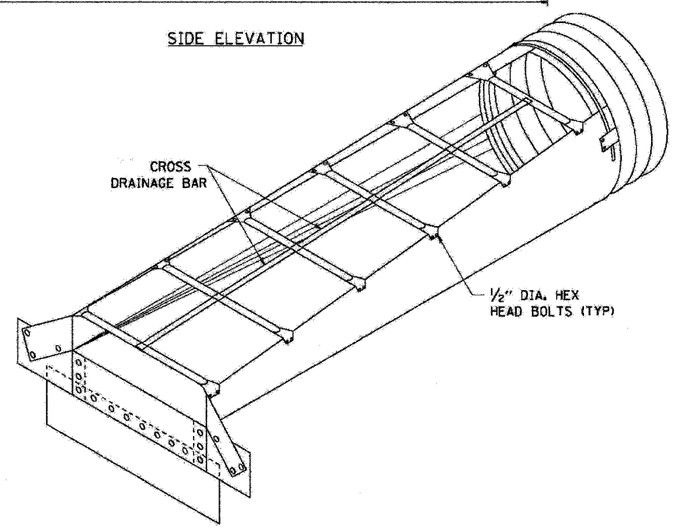

CIRCULAR PIPE ISOMETRIC VIEW

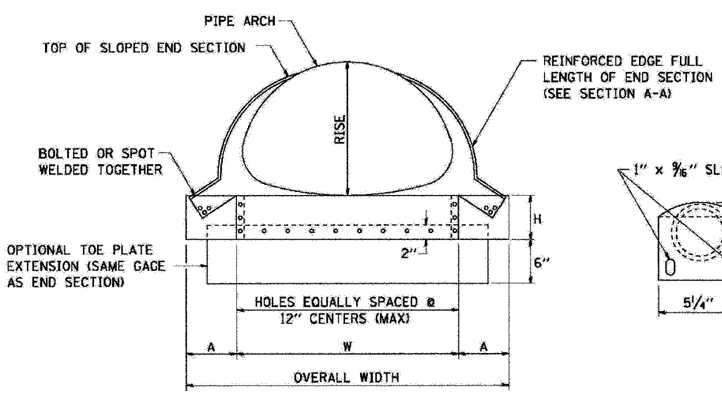

FRONT VIEW PIPE ARCH

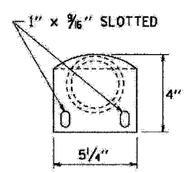

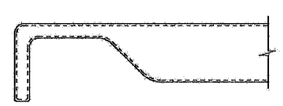

3" GALVANIZED PIPE FLATTEN END, THEN BEND OUTSIDE 4" TO MATCH END SECTION SIDES.

DETAIL OF BARS

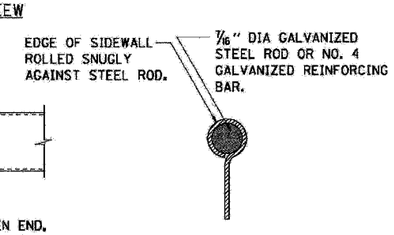

SECTION A-A

GENERAL NOTES

1. CONNECTORS - ROUND SIZES THRU 24" ATTACH TO PIPE WITH TYPE #1 STRAPS, ALL OTHER SIZES ATTACH WITH TYPE #2 RODS AND LUGS.
2. TOE PLATE EXTENSIONS - WHEN REQUIRED, TOE PLATE EXTENSIONS ARE TO BE THE SAME GAGE AS END SECTION. DIMENSIONS SHALL BE OVERALL WIDTH LESS 6 INCHES BY 8 INCHES HIGH.
3. BARS SHALL BE SCHEDULE 40 GALVANIZED STEEL PIPE.
4. TYPICALLY PARALLEL BARS ARE PLACED ON 24" CENTERS.
5. TYPICALLY THE CROSS BARS ARE USED ON CROSS DRAIN APPLICATIONS.
6. HOLES FOR BAR ATTACHMENTS SHALL BE PROVIDED ON ALL END SECTIONS.
7. DIMENSIONS ARE SUBJECT TO MANUFACTURING TOLERANCES.
8. THESE END SECTIONS WILL BE PAID FOR AT THE CONTRACT UNIT PRICE PER EACH FOR SLOPED METAL END SECTIONS WITH GRATE OF THE DIA. AND SLOPE SPECIFIED, WHICH SHALL INCLUDE FURNISHING AND INSTALLING THE END SECTION COMPLETE IN PLACE, INCLUDING THE TOE PLATE, EXCAVATING, BACKFILLING, CONNECTING TO THE PIPE, AND CROSS DRAINAGE BARS.

METAL END SECTIONS FOR ROUND PIPE

PIPE DIA. (IN)	MIN. THICK IN.	MIN. THICK GAGE	DIMENSIONS (INCHES) A	H	W	OVERALL WIDTH	L DIMENSIONS SLOPE	LENGTH (IN.)	SLOPE	LENGTH (IN.)
15	.064	16	8	6	21	37	6:1	30	4:1	20
18	.064	16	8	6	24	40	6:1	48	4:1	32
21	.064	16	8	6	27	43	6:1	66	4:1	44
24	.064	16	8	6	30	46	6:1	84	4:1	56
30	.109	12	12	9	36	60	6:1	120	4:1	80
36	.109	12	12	9	42	66	4:1	104	6:1	156
42	.109	12	16	12	48	80	4:1	128	6:1	192
48	.109	12	16	12	54	86	4:1	152	6:1	228
54	.109	12	16	12	60	92	4:1	176	6:1	264
60	.109	12	16	12	66	98	4:1	200	6:1	300

METAL END SECTIONS FOR PIPE ARCH

EQUIV. DIA. (IN)	(INCHES) SPAN	RISE	MIN. THICK IN.	GAGE	DIMENSIONS (INCHES) A	H	W	OVERALL WIDTH	L DIMENSIONS SLOPE	LENGTH (IN.)	SLOPE	LENGTH (IN.)
18	21	15	.064	16	8	6	27	43	6:1	30	4:1	20
21	24	18	.064	16	8	6	30	46	6:1	48	4:1	32
24	28	20	.064	16	8	6	34	50	6:1	60	4:1	40
30	36	24	.079	14	12	9	41	65	6:1	84	4:1	56
36	42	29	.109	12	12	9	48	72	6:1	114	4:1	76
42	49	33	.109	12	16	12	55	87	4:1	92	6:1	138
48	57	38	.109	12	16	12	63	95	4:1	112	6:1	168
54	64	43	.109	12	16	12	70	102	4:1	132	6:1	198
60	71	47	.109	12	16	12	77	109	4:1	148	6:1	222
72	83	57	.109	12	16	12	89	121	4:1	188	6:1	282

REVISIONS NAME	DATE

ILLINOIS DEPARTMENT OF TRANSPORTATION

SECTION 04-00166-00-BR
DEKALB COUNTY
FAIRVIEW DRIVE BRIDGE

SLOPED METAL
END SECTION DETAIL

SCALE: AS SHOWN | DRAWN BY MWH
DATE 11/05/07 | CHECKED BY CPS

HANSON
Hanson Professional Services Inc.
© Copyright Hanson Professional Services Inc. 2006

LAYOUT	MWH	11/01/01
DRAWN	MWH	11/01/01
REVIEWED	CPS	11/01/01

mwh
11/05/2007 03:42 PM
J:\ADE\Jobs\Q6\1535\Cadd\Road\Sheet\C-504-DET.dgn