ROUTE NO.	SECTION	COUNTY	TOTAL SHEETS	SHEET NO.	
FAU 5345	*	DeKalb	39	17	SHEET NO. 1 / 19 SHEETS
FED. ROAD DIST. NO. 7		ILLINOIS	FED. AID PROJECT-		CONTRACT NO. 87339

* 04-00166-00-BR

Existing Structure: Structure Number 019-4701 consists of a two-span, cast-in-place, reinforced concrete slab bridge built in 1950. The existing structure is 67'-2" long and 28'-6" wide. The substructure consists of closed concrete abutments and a concrete wall pier supported on timber piles. The existing structure shall be completely removed, unless noted otherwise. Fairview Drive will be closed during construction.

No salvage

Bench Marks: FEMA RM 26. Metal rivet. Top of Northeast wingwall of existing structure carrying Fairview Drive over Kishwaukee River. Elev. 851.74.

Chisled square on south side of headwall of 66" RCP approximately 130 feet north of centerline Fairview Drive on East side of Kishwaukee River. Elev. 846.07.

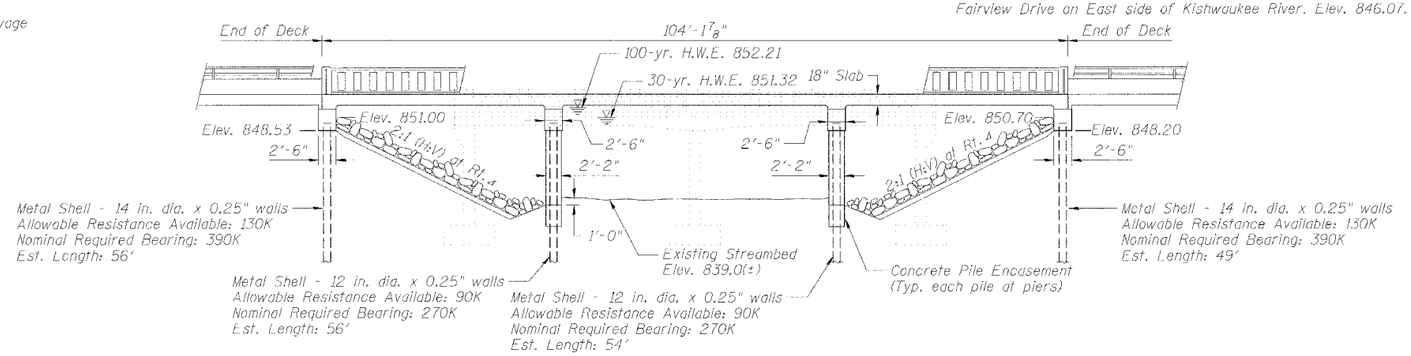

ELEVATION

KISHWAUKEE RIVER
BUILT 20__ BY
CITY OF DEKALB
SECTION 04-00166-00-BR
F.A.U. RT. 5345 STA. 18+34.34
F.A.U. PROJECT BHM-5017(39)
STR. NO. 019-6106 LOADING HS20

LETTERING FOR NAME PLATE

(See Std. 515001-02)

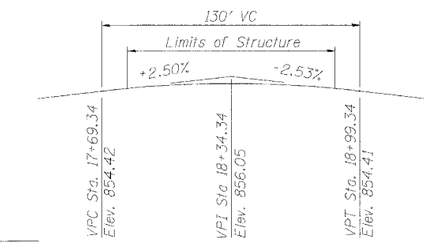

PROFILE GRADE

FAIRVIEW DRIVE

LOADING HS20

Allow 50 #/sq. ft. for future wearing surface.

DESIGN SPECIFICATIONS

2002 AASHTO Standard Specifications for Highway Bridges

1999 AASHTO Guide for the Development of Bicycle Facilities

DESIGN STRESSES

FIELD UNITS

f'c = 4,000 psi (superstructure)
f'c = 3,500 psi (all other units)
fy = 60,000 psi (reinforcement)

SEISMIC DATA

Seismic Performance Category (SPC) = A
Bedrock Acceleration Coefficient (A) = 0.035g
Site Coefficient (S) = 1.0

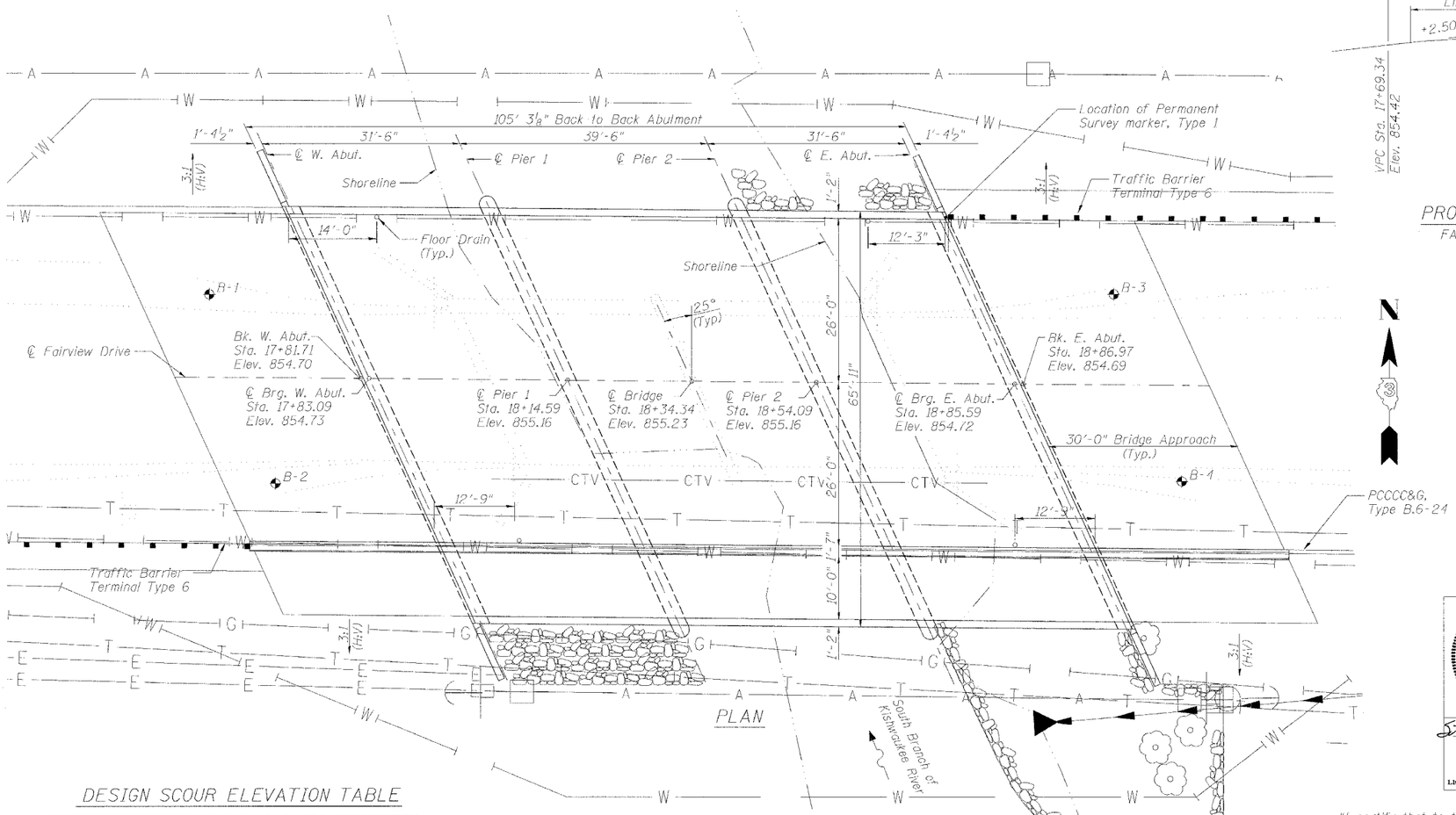

PLAN

Range 4E - 3rd PM

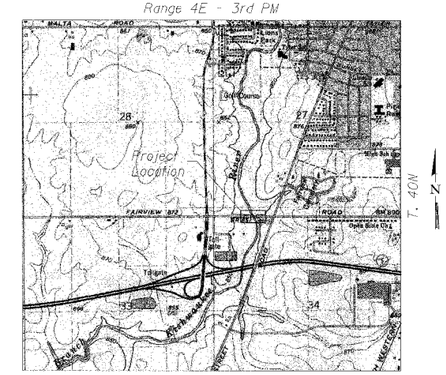

LOCATION SKETCH

DESIGN SCOUR ELEVATION TABLE

Design Scour Elevation (ft.)	W. Abut.	Pier 1	Pier 2	E. Abut.
	851.00	836.30	836.30	850.70

WATERWAY INFORMATION

Drainage Area = 72.9 sq. mi. Low Grade Elev. 849.55 ft. @ Sta. 14+89.02

Flood	Freq. Yr.	Q C.F.S.	Opening Sq. Ft. Exist.	Opening Sq. Ft. Prop.	Nat. H.W.E.	Head-Ft. Exist.	Head-Ft. Prop.	Headwater El. Exist.	Headwater El. Prop.
Design	30	4200	546	725	851.32	0.27	0.18	851.60	851.49
Base	100	5250	546	804	852.21	0.10	0.09	852.31	852.30

STUART M. KEMP 081-004897 LICENSED STRUCTURAL ENGINEER STATE OF ILLINOIS

Stuart M. Kemp
SIGNATURE
11/5/07
DATE
LIC. EXP. DATE: 11/30/08

"I certify that to the best of my knowledge, information and belief, this bridge design is structurally adequate for the design loading shown on the plans. The design is an economical one for the style of structure and complies with requirements of the current 'AASHTO Standard Specifications for Highway Bridges.'"

Corporate License Number 184-001-084

GENERAL PLAN & ELEVATION

FAIRVIEW DRIVE BRIDGE OVER
SOUTH BRANCH OF KISHWAUKEE RIVER
FAU 5345
SECTION 04-00166-00-BR
DEKALB, ILLINOIS
STRUCTURE NUMBER 019-6106
STATION 18+34.34

© Copyright Hanson Professional Services Inc. 2007

HANSON

JOB NO. 06R1555

DATE 11/05/07

LAYOUT	MRH	10/12/06
DRAWN	MRH	10/13/07
REVIEWED	SMK	10/15/07

11:43:51 AM
I:\DSVDOT\11x43 AM
H:\06\06R1555\Local\Struct\Sheets\S-001-GPALE.dgn