ROUTE NO.	SECTION	COUNTY	TOTAL SHEETS	SHEET NO.
FAU 5345	*	DeKalb	39	27
FED. ROAD DIST. NO. 7		ILLINOIS	FED. AID PROJECT-	

SHEET NO. 11
19 SHEETS
CONTRACT NO. 87339

* 04-00166-00-BR

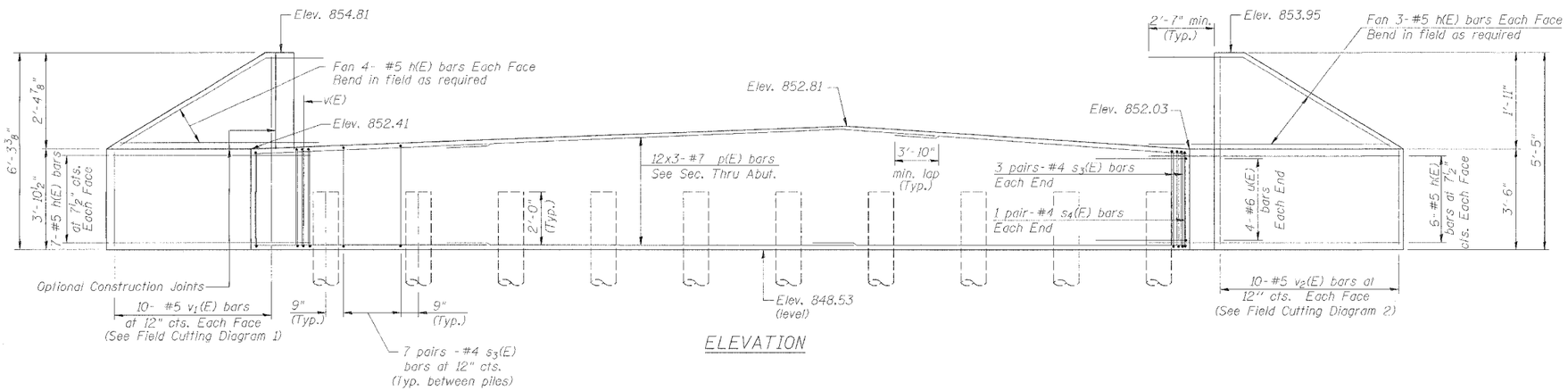

ELEVATION

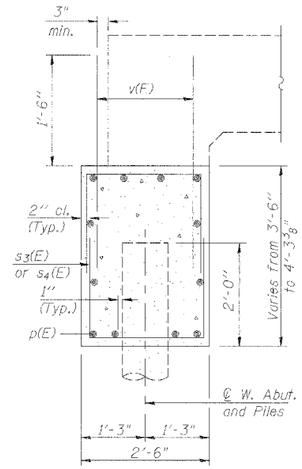

SEC. THRU ABUT.
(Dimensions at Right Angles)

NOTES:

Excavation behind existing abutment shall be performed to balance front and back soil pressure before removing the existing superstructure.

Reinforcement bars designated (E) shall be epoxy coated.

Bars marked thus 2x4-#5 etc. indicate 2 lines of bars with 4 lengths per line.

See Sheet 14 of 19 for Metal Shell Pile details.

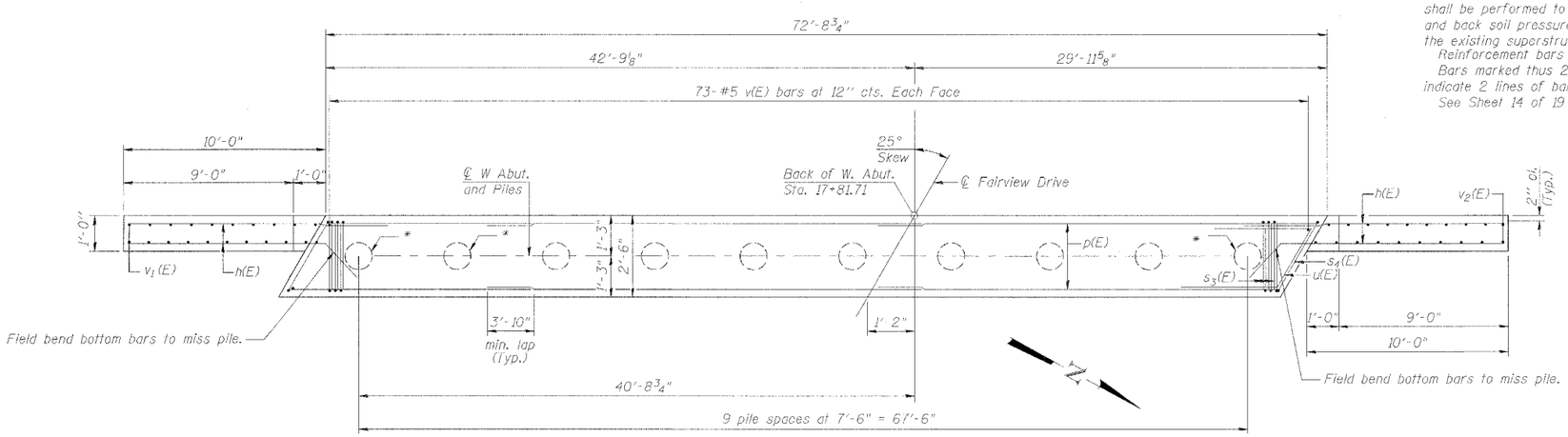

PLAN

WEST ABUTMENT BILL OF MATERIAL

Bar	No.	Size	Length	Shape
h(E)	40	#5	12'-11"	
p(E)	36	#7	26'-9"	
s3(E)	138	#4	8'-2"	
s4(E)	4	#4	8'-5"	
u(E)	8	#6	9'-11"	
v(E)	146	#5	4'-4"	
v1(E)	10	#5	9'-5"	
v2(E)	10	#5	8'-3"	
Structure Excavation			Cu. Yd.	125.3
Concrete Structures			Cu. Yd.	30.4
Reinforcement Bars, Epoxy Coated			Pound	4250
Furnishing Metal Shell Piles 14"			Foot	504
Driving and Filling Shells			Foot	504
Test Pile Metal Shells			Each	1
Porous Granular Embankment (Special)			Cu. Yd.	64.4
Pipe Underdrains for Structures 4"			Foot	113

PILE DATA

Type: Metal Shell - 14 in. dia. x 0.25" walls
Nominal Required Bearing: 390K
Allowable Resistance Available: 130K
Est. Length: 56 ft
No. Production Piles: 9
No. Test Piles: 1

* Piles shall be driven through 18" φ precored holes extending to elevation 846.0 according to Article 512.09(c) of the Standard Specifications. Cost included in Driving and Filling Shells.

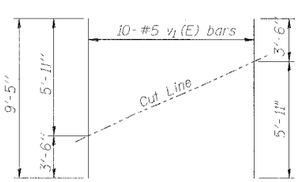

FIELD CUTTING DIAGRAM 1

Order v1(E) full length. Cut as shown and use remainder of bars in opposite face.

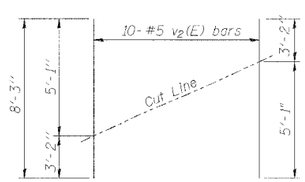

FIELD CUTTING DIAGRAM 2

Order v2(E) full length. Cut as shown and use remainder of bars in opposite face.

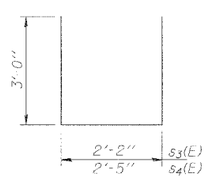

BARS s3(E) & s4(E)

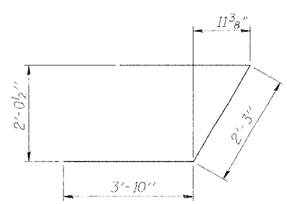

BAR u(E)

Corporate License Number 184-001-084

WEST ABUTMENT

FAIRVIEW DRIVE BRIDGE OVER
SOUTH BRANCH OF KISHWAUKEE RIVER
FAU 5345
SECTION 04-00166-00-BR
DEKALB, ILLINOIS
STRUCTURE NUMBER 019-6106
STATION 18+34.34

© Copyright Hanson Professional Services Inc. 2007

HANSON

JOB NO. 06R1555
DATE 11/05/07

LAYOUT	MWH	07/11/07
DRAWN	MWH	10/19/07
REVIEWED	JKR	10/19/07

12:43:50 PM
11/05/2007
I:\06JOBS\06R1555\Cadd\StructSheets\S-DrWF\ST-4B1F.dgn