ROUTE NO.	SECTION	COUNTY	TOTAL SHEETS	SHEET NO.
FAU 5345	*	DeKalb	39	29
FED. ROAD DIST. NO. 7		ILLINOIS	FED. AID PROJECT-	

SHEET NO. 13
19 SHEETS
CONTRACT NO. 87339

* 04-00166-00-BR

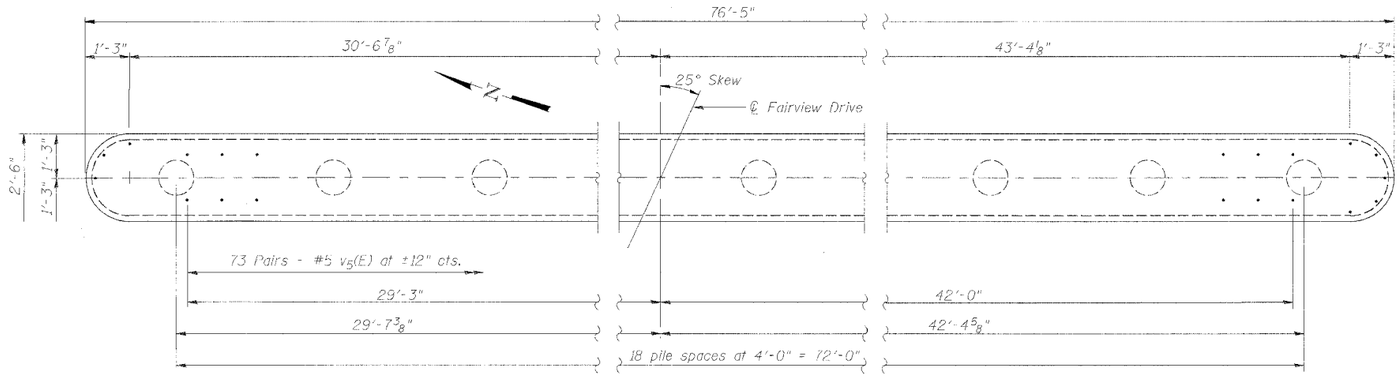

PLAN

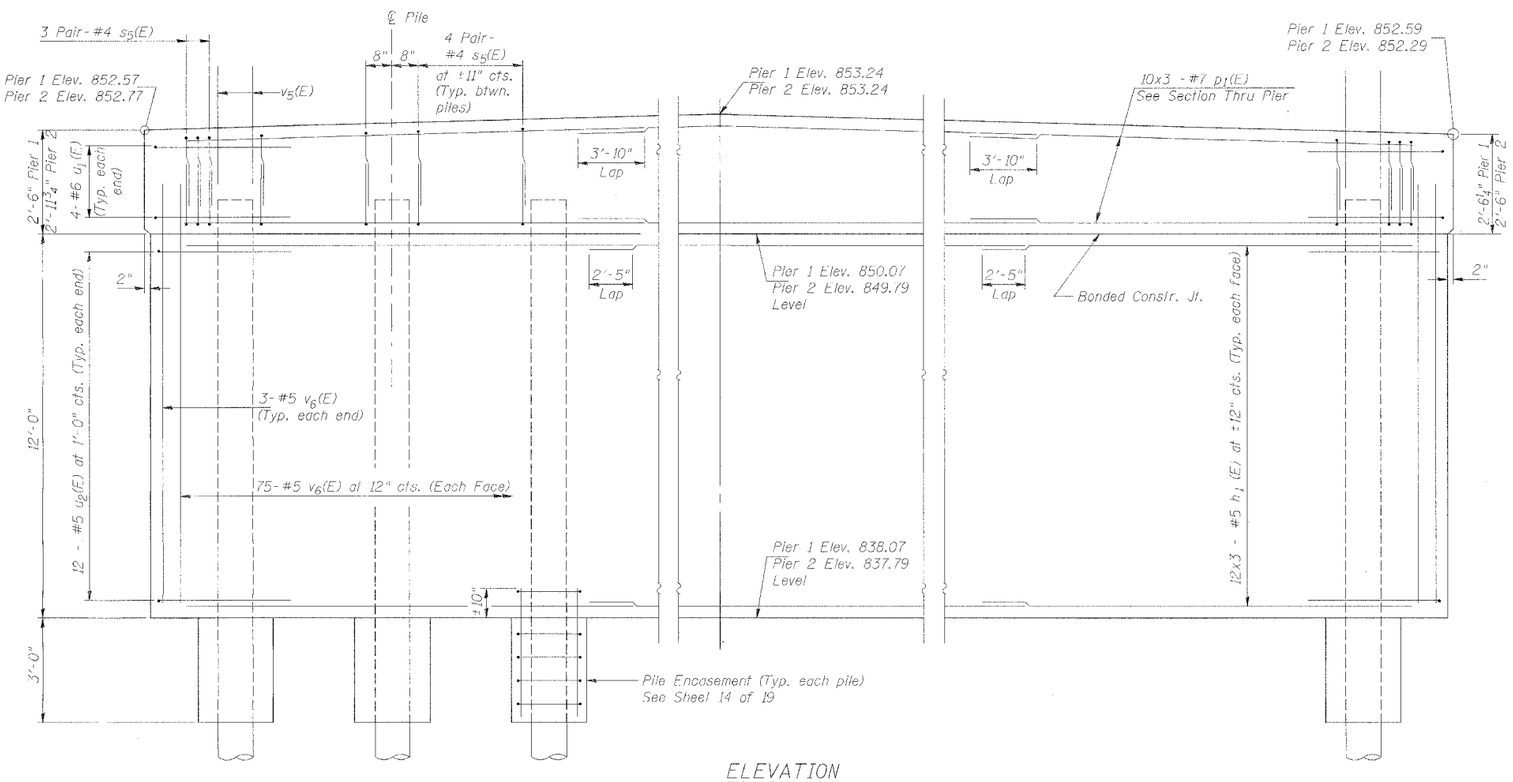

ELEVATION

PILE DATA

Type: Metal Shell - 12" dia. x 0.25" walls
Nominal Required Bearing: 270K
Allowable Resistance Available: 90K
Est. Length: 56 ft. Pier 1, 54 ft. Pier 2
No. Production Piles: 36 (18 at each pier)
No. Test Piles: 2 (One at each Pier)

* Pier 1 Varies from 2'-6" to 3'-2"
Pier 2 Varies from 2'-6" to 3'-5 3/8"

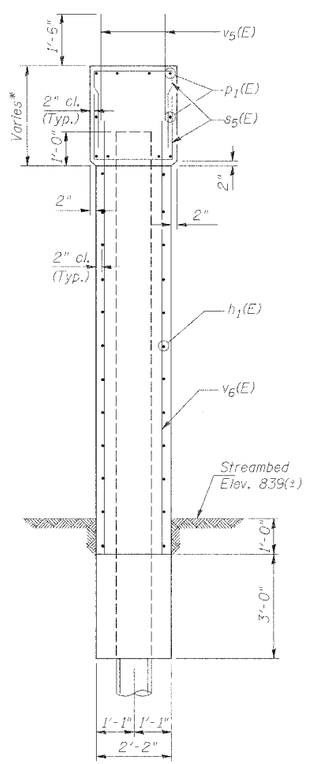

SECTION THRU PIER

BILL OF MATERIAL FOR TWO PIERS

Bar	No.	Size	Length	Shape
h_1(E)	144	#5	26'-4"	
p_1(E)	60	#7	27'-3"	
s_5(E)	312	#4	6'-4"	
u_1(E)	16	#6	10'-3"	
u_2(E)	48	#5	7'-11"	
v_5(E)	292	#5	3'-10"	
v_6(E)	312	#5	13'-6"	
Reinforcement Bars, Epoxy Coated		Pound	14,820	
Concrete Structures		Cu. Yd.	184.3	
Furnishing Metal Pile Shell, 12"		Foot	1980	
Driving and Filling Shells		Foot	1980	
Test Pile Metal Shells		Each	2	
Structure Excavation		Cu. Yd.	12.4	

NOTES:

Reinforcement bars designated (E) shall be epoxy coated.
Bars marked thus 20 x 3 - #5 etc. indicate 20 lines of bars with 3 lengths per line.
See Sheet 14 of 19 for Metal Shell Pile Details.

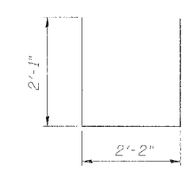

BAR s_5(E)

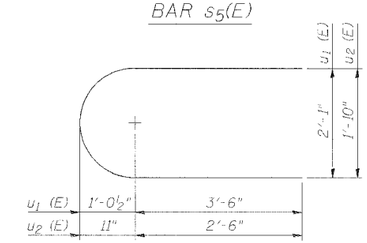

BARS u_1(E) & u_2(E)

Corporate License Number 184-001-084

PIERS

FAIRVIEW DRIVE BRIDGE OVER
SOUTH BRANCH OF KISHWAUKEE RIVER
FAU 5345
SECTION 04-00166-00-BR
DEKALB, ILLINOIS
STRUCTURE NUMBER 019-6106
STATION 18+34.34

© Copyright Hanson Professional Services Inc. 2007

HANSON

JOB NO. 06R1555
DATE 11/05/07

12:45:05 PM
11/05/2007 12:45 PM
J:\06Jobs\06r1555\Cad\Struct\Sheet\S-03-PIERS.dgn

LAYOUT	MKE	11/29/06
DRAWN	MKE	10/19/07
REVIEWED	JKR	10/19/07