CONTROLLER SEQUENCE

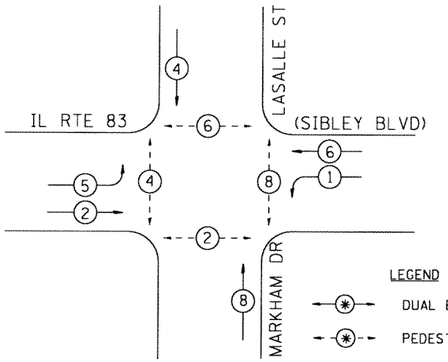

EMERGENCY VEHICLE PREEMPTION SEQUENCE

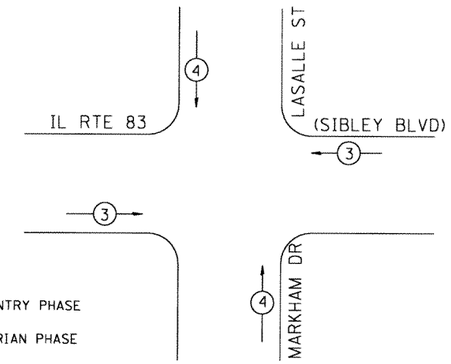

PHASE DESIGNATION DIAGRAM

EMERGENCY VEHICLE PREEMPTORS		
EMERGENCY VEHICLE PREEMPTOR	3	4
MOVEMENT	←→	↓↑

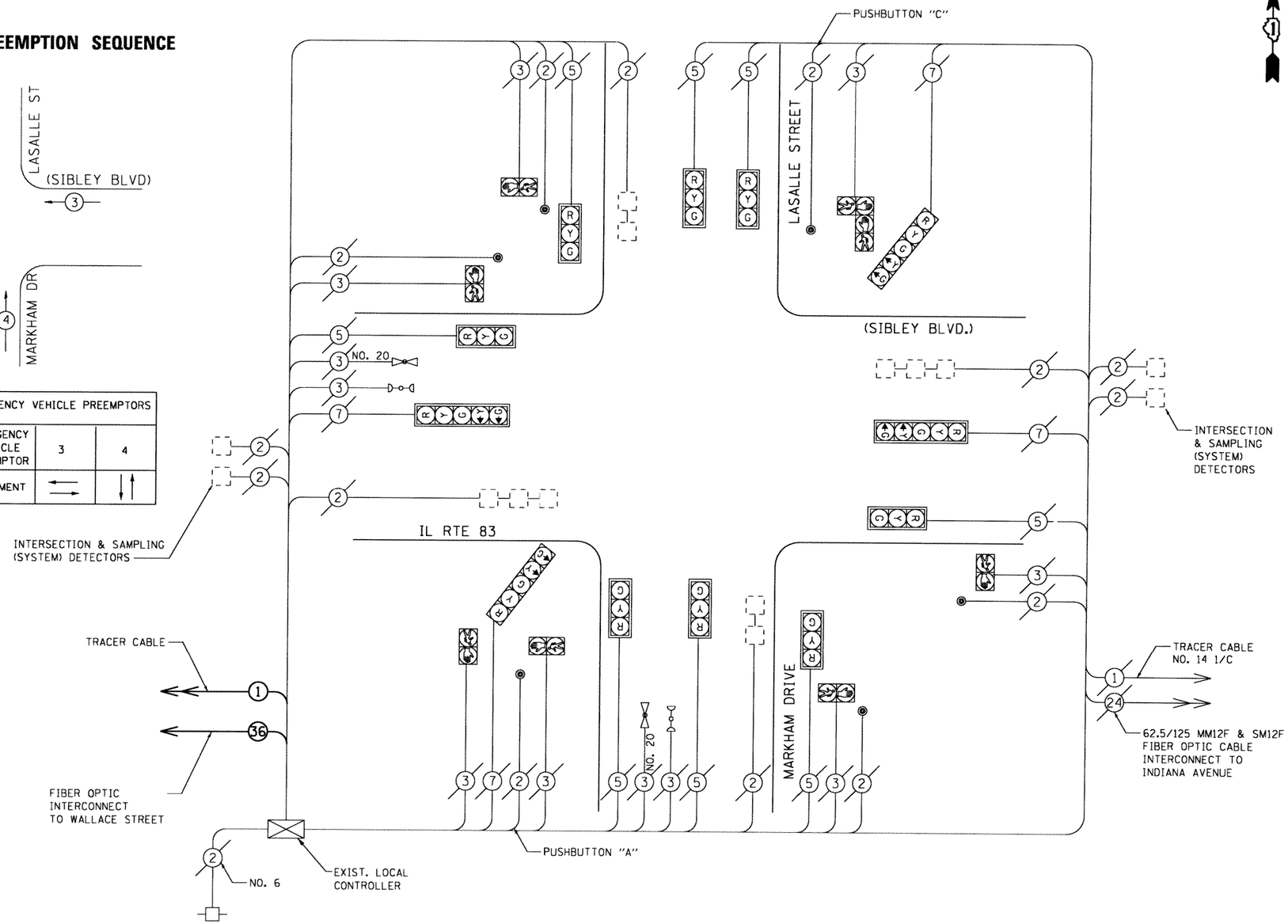

I.D.O.T. TRAFFIC SIGNAL INSTALLATION ELECTRICAL SERVICE REQUIREMENTS					TOTAL WATTAGE
TYPE	NO. LAMPS	WATTAGE INCAND.	WATTAGE LED	%OPERATION	
SIGNAL (RED)	12	135		0.5	810
(YELLOW)	12	135		0.25	405
(GREEN)	12	135		0.25	405
ARROW	8	135		0.10	108
PED. SIGNAL	8	90		1.00	720
CONTROLLER	1	100		1.00	100
ILLUM. SIGN	-	252		0.05	-
FLASHER	-	-	-	0.50	-
ENERGY COSTS TO:				TOTAL =	2548

ENERGY SUPPLY CONTACT: _____
PHONE: _____
COMPANY: _____

NOTE

PUSHBUTTON "A" SHALL PLACE A CALL IN PHASES 2 AND 4.
PUSHBUTTON "B" SHALL PLACE A CALL IN PHASES 4 AND 6.
PUSHBUTTON "C" SHALL PLACE A CALL IN PHASES 6 AND 8.
PUSHBUTTON "D" SHALL PLACE A CALL IN PHASES 8 AND 2.

TS*3465

FILE NAME = S:\JOL\6300--6399\6346\043\Micros\CADD Sheets\D12345-sht-ts-cable-LaSalle.dgn

STRAND ASSOCIATES
1170 SOUTH HOUBOLT ROAD
JOLIET, ILLINOIS 60431
(815) 744-4200

USER NAME = brianf	DESIGNED - RMS	REVISED - RMS	
	DRAWN - DJW	REVISED - BJF	
PLOT SCALE = 40.0000 ' / in.	CHECKED - ARM	REVISED - ARM	
PLOT DATE = 12/4/2012	DATE - 10/17/2012	REVISED - 12/4/12	

STATE OF ILLINOIS
DEPARTMENT OF TRANSPORTATION

CABLE PLAN, PHASE DESIGNATION DIAGRAM AND EMERGENCY VEHICLE PREEMPTION SEQUENCE
IL. RTE. 83 (SIBLEY BLVD) AND LASALLE STREET/MARKHAM DRIVE

SCALE: AS SHOWN | SHEET OF SHEETS | STA. TO STA.

F.A.P. RTE.	SECTION	COUNTY	TOTAL SHEETS	SHEET NO.
397	104TS-1(12)	COOK	38	22

CONTRACT NO. 60T92
ILLINOIS FED. AID PROJECT