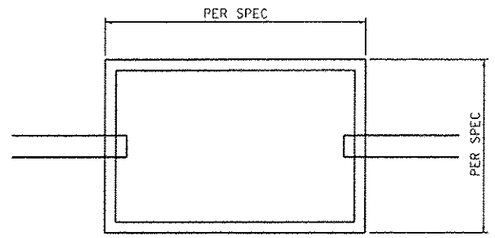


**TOP VIEW**

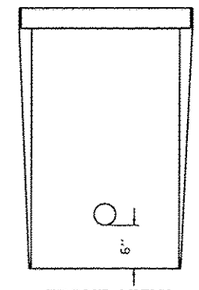


**FRONT VIEW**

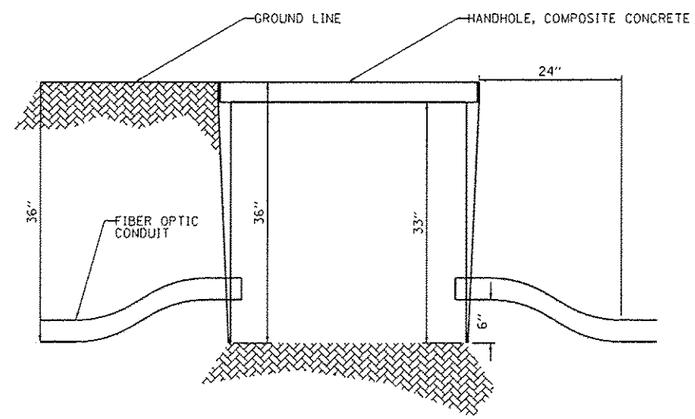


**SIDE VIEW**

# FIBER OPTIC HANDHOLE

1

N.T.S.

DIRECTORY = L:\DOCUMENTS\11960\Drawings\CADD_Sheets\D284821_DLA...
USER NAME = Jason Dove

| | | | | | | | | | | | |
|---|---|---|---|---|---|---|---|---|---|---|---|
| CMT CRAWFORD, MURPHY & TILLY, INC. CONSULTING ENGINEERS License No. 184-000513 | MODEL NAME = Default | DESIGNED - JWD | REVISED - | STATE OF ILLINOIS DEPARTMENT OF TRANSPORTATION | ROADWAY LIGHTING DETAIL FIBER OPTIC HANDHOLE | F.A.P. RTE. | SECTION | COUNTY | TOTAL SHEETS | SHEET NO. |
| | FILE NAME = D284821-SHHighH022.dgn | DRAWN - JWD | REVISED - | | | 742 | (32, 33) R-1 | WINNEBAGO | 705 | 508 |
| | PLOT SCALE = 40.0018 ' / in. | CHECKED - AB | REVISED - | | | | | CONTRACT NO. 64821 | | |
| | PLOT DATE = 2/22/2013 - 3:46:05 PM | DATE - 11/02/2012 | REVISED - | | SCALE: N/A SHEET 22 OF 32 SHEETS STA. TO STA. | | | ILLINOIS FED. AID PROJECT | | |