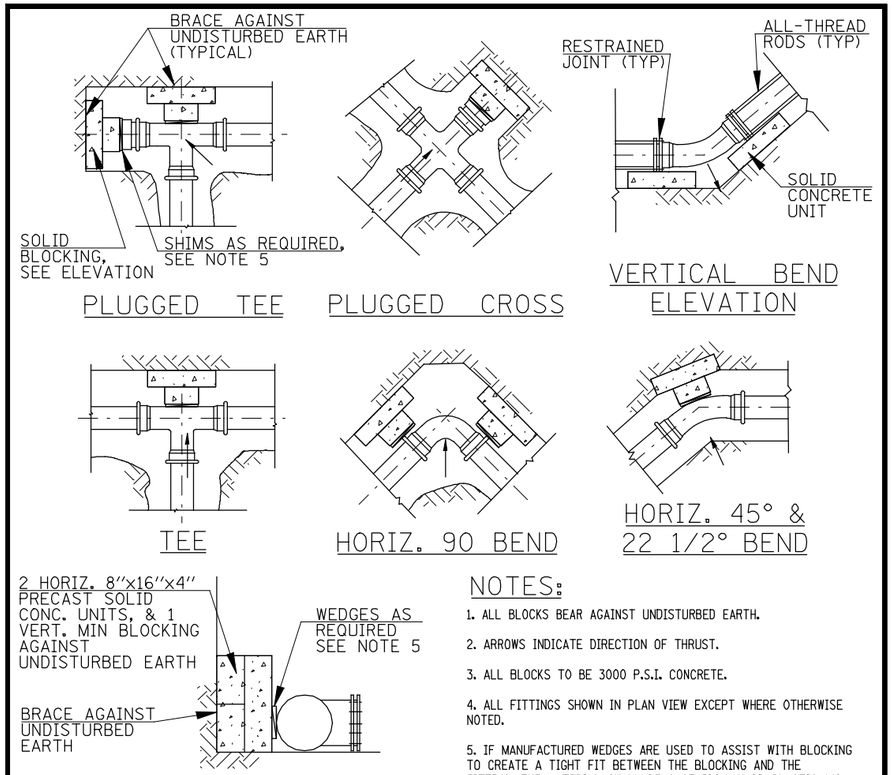


## NOTES:

1. ALL BLOCKS BEAR AGAINST UNDISTURBED EARTH.
2. ARROWS INDICATE DIRECTION OF THRUST.
3. ALL BLOCKS TO BE 3000 P.S.I. CONCRETE.
4. ALL FITTINGS SHOWN IN PLAN VIEW EXCEPT WHERE OTHERWISE NOTED.
5. IF MANUFACTURED WEDGES ARE USED TO ASSIST WITH BLOCKING TO CREATE A TIGHT FIT BETWEEN THE BLOCKING AND THE FITTING, THE MATERIAL SHALL BE CAST IRON, HARD PLASTIC (NO WOOD OR OTHER MATERIAL WHICH COULD DETERIORATE) OR OTHER MATERIAL APPROVED BY THE ENGINEER.
6. IF UNSTABLE MATERIAL IS ENCOUNTERED DURING CONSTRUCTION IT MAY BE NECESSARY TO PROVIDE A LARGER AREA OF BEARING AGAINST UNDISTURBED SOIL FOR BLOCKING. IT SHALL BE THE CONTRACTOR'S RESPONSIBILITY TO VERIFY SOIL CONDITIONS AND PROVIDE THE SQUARE FOOT OF BEARING AREA REQUIRED FOR EACH FITTING.
7. CONCRETE THRUST BLOCKING SHALL BE PRECAST UNLESS OTHERWISE APPROVED BY CITY OF ENGINEER.

CITY OF MACOMB, ILLINOIS
PUBLIC WORKS DEPARTMENT
233 CENTER STREET
MACOMB, ILLINOIS 61455
(309) 833-2821

TYPICAL THRUST BLOCKING DETAIL
4", 6" & 8" WATER MAIN

DATE: 10-01/2012
CHECKED: KC/JB
SHEET NO. 1 of 1

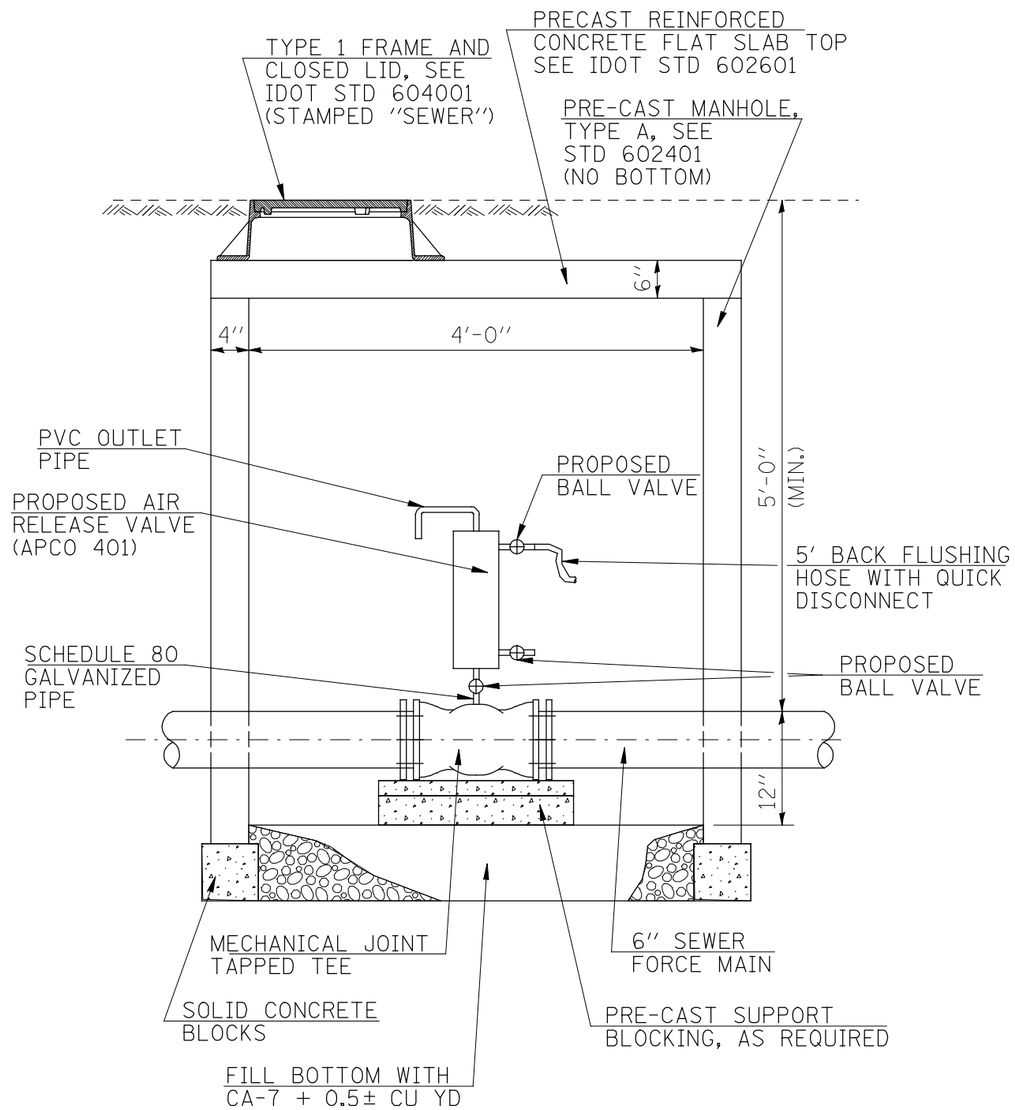


*AIR RELEASE VALVE DETAIL*
*SCALE : NONE*

| | | | |
|---|---|---|---|
| FILE NAME = | USER NAME = jdeen | DESIGNED - JRB | REVISED - |
| v:\transportation\2891\grading plans\W001.dgn | | DRAWN - RLR | REVISED - |
| | PLOT SCALE = 1.00 ' / IN. | CHECKED - AWM | REVISED - |
| | PLOT DATE = 12/12/2012 | DATE - 12-12-12 | REVISED - |

**STATE OF ILLINOIS**
**DEPARTMENT OF TRANSPORTATION**

**FAP 407 (IL RTE 336)**
**UTILITY SPECIAL DETAILS**

SCALE: 1"=50 | SHEET NO. 4 OF 4 SHEETS | STA. TO STA.

| F.A.P. RTE. | SECTION | COUNTY | TOTAL SHEETS | SHEET NO. |
|---|---|---|---|---|
| 407 | (55-3)A | McDONOUGH | 671 | 177 |
| | | CONTRACT NO. 68A42 | | |
| | ILLINOIS FED. AID PROJECT | | | |