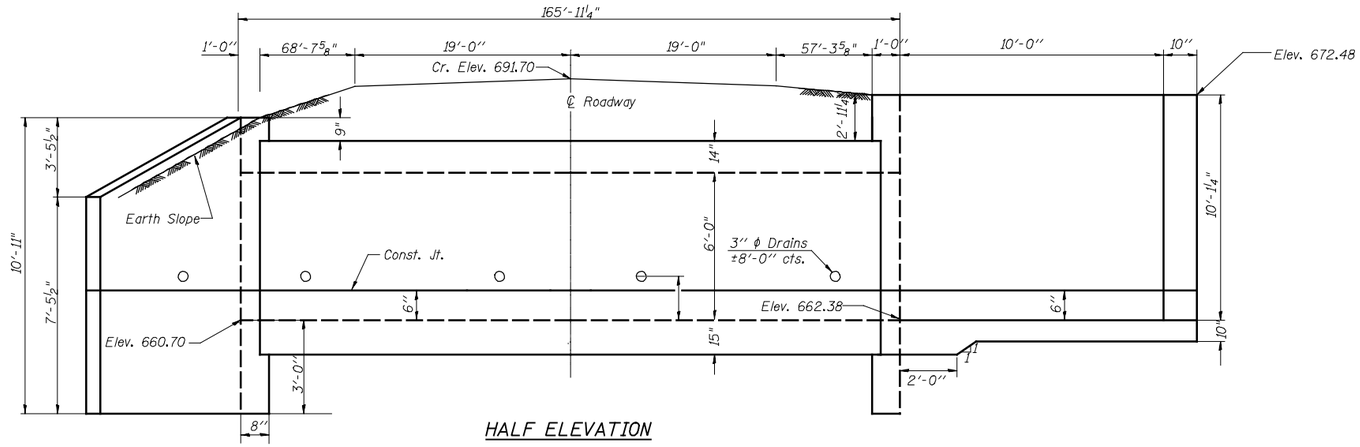

HALF ELEVATION

Dimensions at Rt. L's to ℄ Roadway

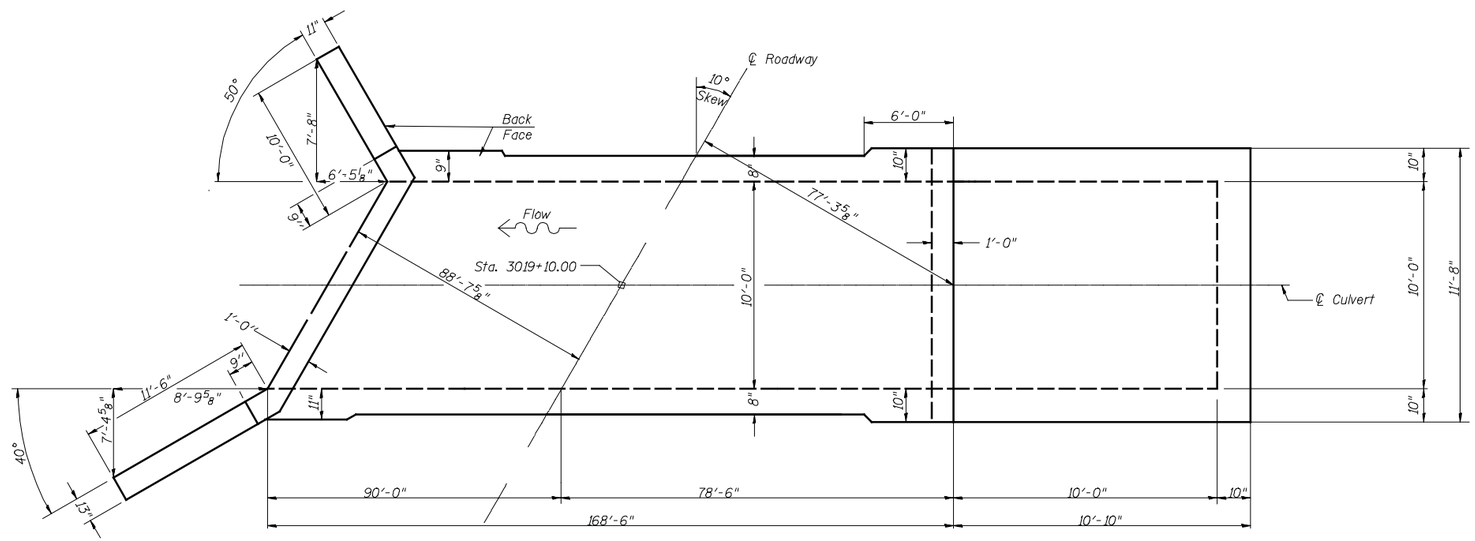

SHOWING OUTLINES

PLAN

NOTES

A distance of half the length of the wingwall but not less than six feet of the barrel shall be poured monolithically with the wingwalls.

Bars indicated thus 12 x 4-#5 etc. indicates 12 lines of bars with 4 lengths per line.

BILL OF MATERIAL

Bar	No.	Size	Length	Shape
a_1	682	#9	13'-3"	
a_2	174	#4	10'-3"	
a_3	24	#5	11'-4"	
d	22	#4	4'-6"	
h	110	#6	35'-6"	
h_1	132	#6	30'-5"	
h_2	84	#6	30'-5"	
h_3	12	#8	8'-0"	
h_4	2	#6	10'-6"	
h_5	4	#6	11'-8"	
h_6	8	#9	14'-5"	
h_7	11	#9	8'-0"	
h_8	10	#8	13'-2"	
h_9	22	#4	13'-0"	
h_{10}	22	#4	11'-4"	
h_{11}	22	#4	13'-5"	
h_{12}	5	#7	19'-10"	
h_{13}	5	#7	17'-3"	
h_{14}	24	#5	10'-6"	
v	583	#7	8'-1"	
v_1	28	#6	10'-8"	
v_2	34	#6	6'-4"	
v_3	34	#4	9'-3"	
v_4	34	#6	9'-3"	
v_5	10	#5	5'-1"	
v_6	10	#5	6'-1"	
v_7	34	#6	5'-10"	
Concrete Box Culverts			Cu. Yd.	246
Reinforcement Bars			Pound	62,100
Pipe Handrail			Foot	43.3
Porous Granular Embankment			Cu. Yd.	1573

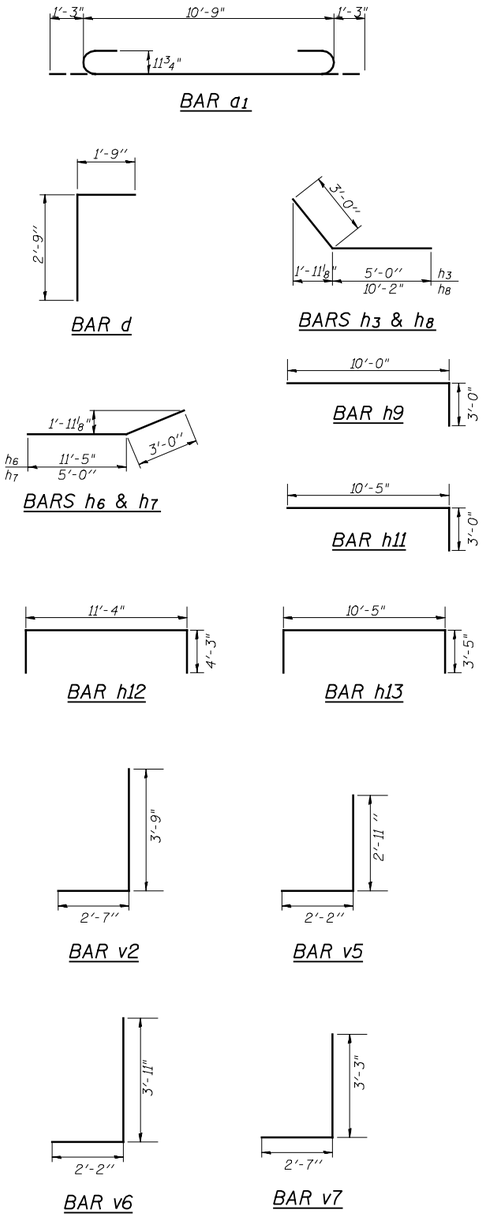

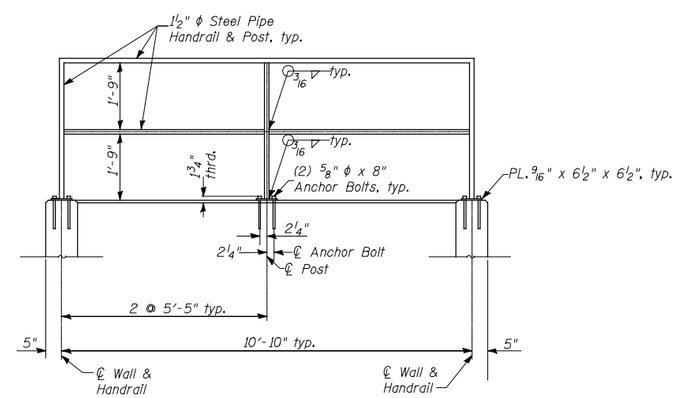

HANDRAIL ELEVATION

(Typical 4 Sides)

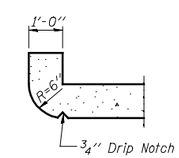

SECTION THRU HEADWALL

(Up Stream End Only)

DESIGN STRESSES

fy = 60,000 psi
f'c = 3,500 psi

FILE NAME = vz\transportation\2891\grading plans\Hermann Final\Culvert 3019+10.00_DETAIL SHEET.dgn	USER NAME = jdeen	DESIGNED -	REVISED -	STATE OF ILLINOIS DEPARTMENT OF TRANSPORTATION
		DRAWN -	REVISED -	
	PLOT SCALE = 2.000000 FT / IN.	CHECKED - JOH	REVISED -	
	PLOT DATE = 12/12/2012	DATE - 12-12-12	REVISED -	

CULVERT DETAILS
STA 3019+10.00

SCALE: | SHEET NO. 3 OF 3 SHEETS | STA. | TO STA.

F.A.P. RTE.	SECTION	COUNTY	TOTAL SHEETS	SHEET NO.
407	(55-3)A	MCDONOUGH	671	283
		CONTRACT NO. 68A42		
		ILLINOIS FED. AID PROJECT		