EXISTING

① P.C.C. PAVEMENT
② 1'' BITUMINOUS CONCRETE LEVELING BINDER
③ 1.5'' BITUMINOUS CONCRETE BINDER COURSE
④ 1.5'' BITUMINOUS CONCRETE SURFACE
⑤ BITUMINOUS SHOULDER 8''
⑥ AGGREGATE SHOULDER, TYPE B 6''

PROPOSED

⑦ POLYMER HMA SURFACE COURSE, MIX E, N50, 2.0''
⑧ HMA BINDER COURSE, IL-19.0, N50, 8.5''
⑨ HMA SHOULDER, 10.5''
⑩ AGGREGATE SHOULDER, TYPE B 6''
⑪ AGGREGATE BASE COURSE TYPE A 8''

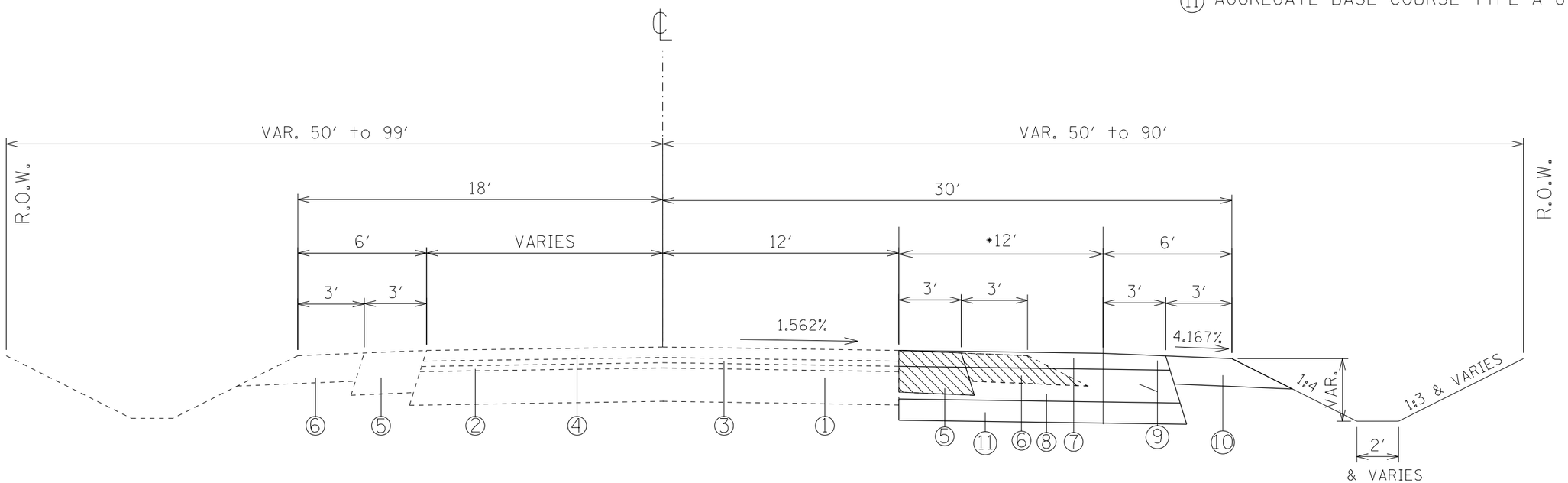

PROPOSED TYPICAL SECTION

ROUTE 116
*251+48 - 256+28
256+28 - 273+80
*273+80 - 278+60
*VARIES 3'-12'

FILE NAME = D468A71-sht-plan.dgn	USER NAME = keithbr	DESIGNED -	REVISED -	STATE OF ILLINOIS DEPARTMENT OF TRANSPORTATION	TYPICAL SECTION Not to Scale	F.A.P. RTE.	SECTION	COUNTY	TOTAL SHEETS	SHEET NO.
		DRAWN -	REVISED -			669	(11R)W-1	PEORIA	33	8
	PLOT SCALE = 200.0000 ' / in.	CHECKED -	REVISED -			CONTRACT NO. 68A71				
	PLOT DATE = 12/12/2012	DATE -	REVISED -		SCALE: SHEET OF SHEETS STA. 251+48 TO STA. 278+60	ILLINOIS FED. AID PROJECT				