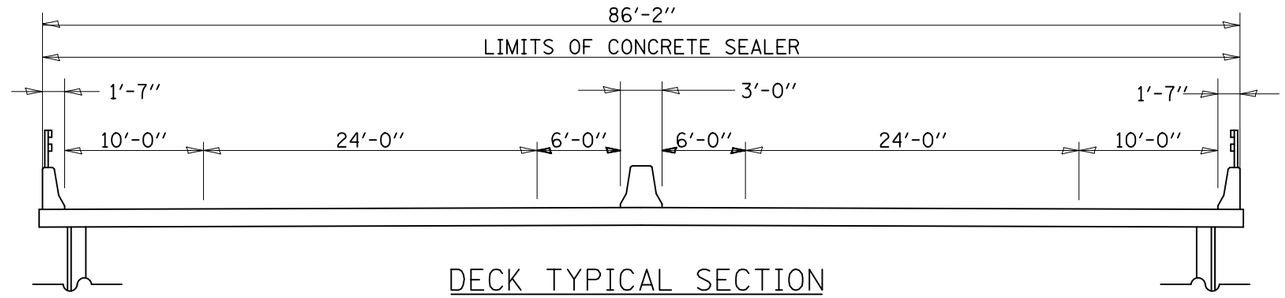

DECK TYPICAL SECTION

STA. 208+35 TO STA. 224+43.04
STA. 237+97.12 TO STA. 254+55

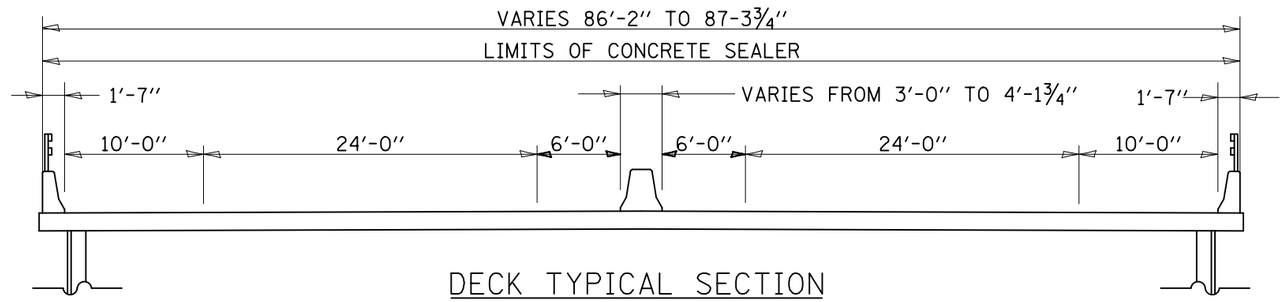

DECK TYPICAL SECTION

STA. 224+43.04 TO STA. 225+21.5
STA. 237+18.5 TO STA. 237+97.12

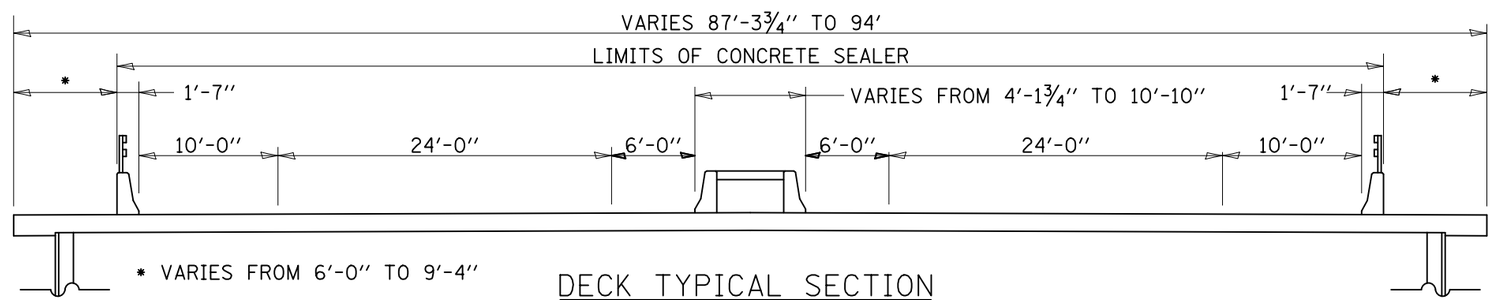

* VARIES FROM 6'-0" TO 9'-4"

DECK TYPICAL SECTION

STA. 225+21.5 TO STA. 227+22
STA. 235+18 TO STA. 237+18.5

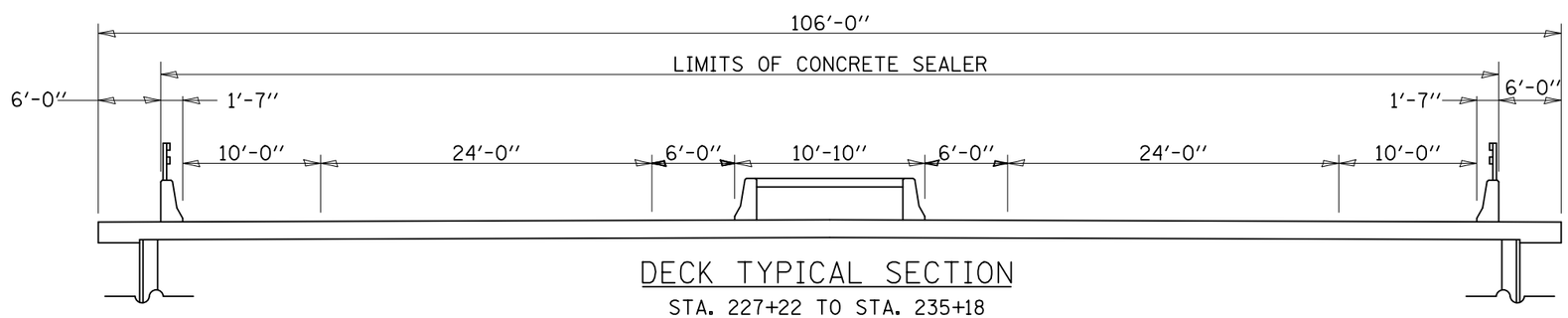

DECK TYPICAL SECTION

STA. 227+22 TO STA. 235+18

FILE NAME = $FILEL$	USER NAME = $USER$	DESIGNED - GEL	REVISED -	STATE OF ILLINOIS DEPARTMENT OF TRANSPORTATION	TYPICAL SECTIONS	F.A. RTE.	SECTION	COUNTY	TOTAL SHEETS	SHEET NO.
		DRAWN - LAC	REVISED -			304	100B-1DS-1		58	5
	PLOT SCALE = $SCALE$	CHECKED - MDP	REVISED -					CONTRACT NO. 76E73		
	PLOT DATE = $DATE$	DATE - 11/16/2012	REVISED -		SCALE: SHEET NO. 1 OF 1 SHEETS STA. TO STA.	FED. ROAD DIST. NO.	ILLINOIS	FED. AID PROJECT		