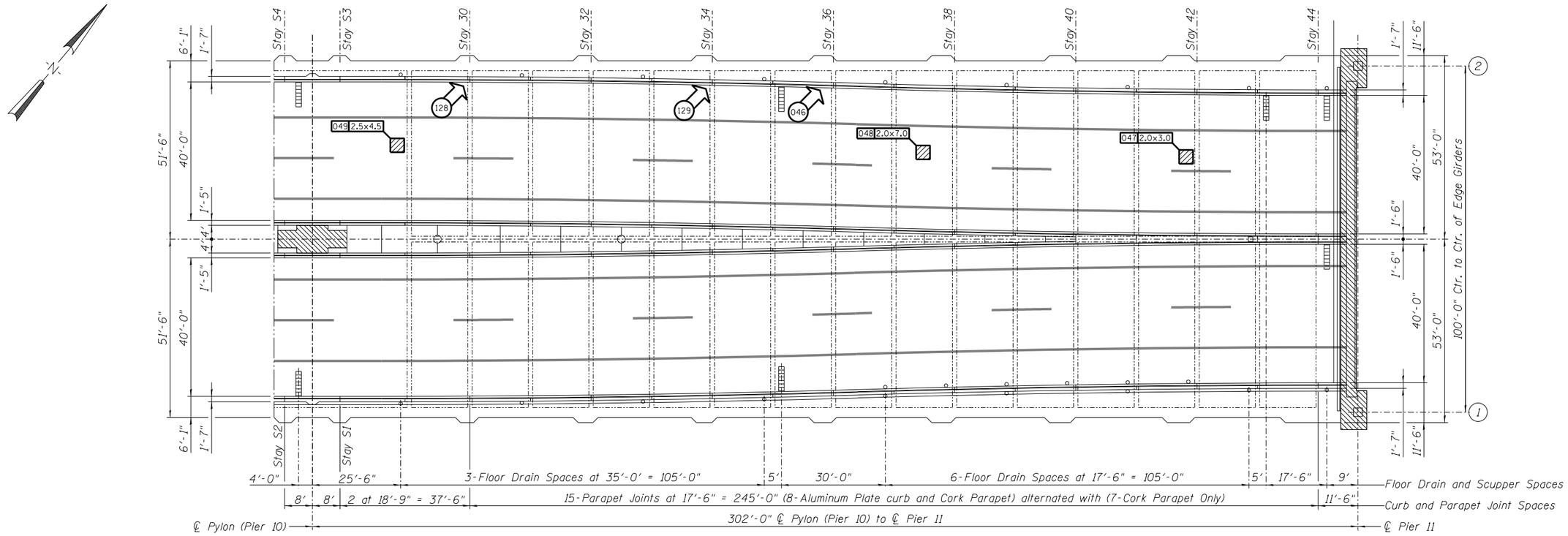

CSS - ILLINOIS TAIL SPAN - SPAN 11

REPAIRS LIST - SPAN 11

	I.D.	Description	Pay Item	Units	Quantity
*	046	Missing Fasteners Bridge Rail Splice	-	-	-
	047	Concrete Spall	Deck Slab Repair (Partial)	SQ. YD.	0.67
	048	Concrete Spall	Deck Slab Repair (Partial)	SQ. YD.	1.56
	049	Concrete Spall	Deck Slab Repair (Partial)	SQ. YD.	1.25
*	128	Missing Fasteners Bridge Rail Splice	-	-	-
*	129	Missing Fasteners Bridge Rail Splice	-	-	-
	-	-	-	-	-
	-	-	-	-	-
	-	-	-	-	-
	-	-	-	-	-
	-	-	-	-	-
	-	-	-	-	-
	-	-	-	-	-
	-	-	-	-	-
	-	-	-	-	-
	-	-	-	-	-
	-	-	-	-	-
	-	-	-	-	-
	-	-	-	-	-
	-	-	-	-	-
	-	-	-	-	-
	-	-	-	-	-

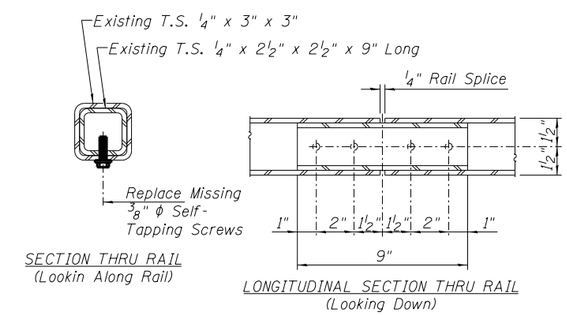

BRIDGE RAIL SPLICE FASTENER REPAIR

Note:
When neccessary reposition interior splice sleeve by realigning the sleeve and rail holes for either side prior to installing new fasteners. Install 2 fasteners on one side only. Fasteners shall be self tapping galvanized screws of sufficient diameter to retap any damaged screw holes and provide a tight connection.

* Cost for repairing existing bridge rail splice shall be included in the Cost of Deck Slab Repair (Partial).

OTHER ITEMS

DECK SLAB REPAIR (PARTIAL)

DESIGNED -	EXAMINED	DATE -	
CHECKED -	ENGINEER OF STRUCTURAL SERVICES		
DRAWN Rod	PASSED		
CHECKED MNM	ENGINEER OF BRIDGES AND STRUCTURES		

STATE OF ILLINOIS
DEPARTMENT OF TRANSPORTATION

REPAIRS TO - CSS - DECK SLAB and PARAPETS - SPAN 11
STRUCTURE NO. 060-0255

SHEET NO. 09 OF 48 SHEETS

F.A.P. RTE.	SECTION	COUNTY	TOTAL SHEETS	SHEET NO.
304	100B-1DS-1	MADISON	58	19
		CONTRACT NO. 76E73		
		ILLINOIS FED. AID PROJECT		

© Copyright Hanson Professional Services Inc. 2012

hu11m00028 10/17/2012 12:08:50 PM
I:\Vj\Jobs\IH0007\W04\CAD\SHEETS\06000255-76E73-009-Deck_Repairs_CSS_Span_11.dgn