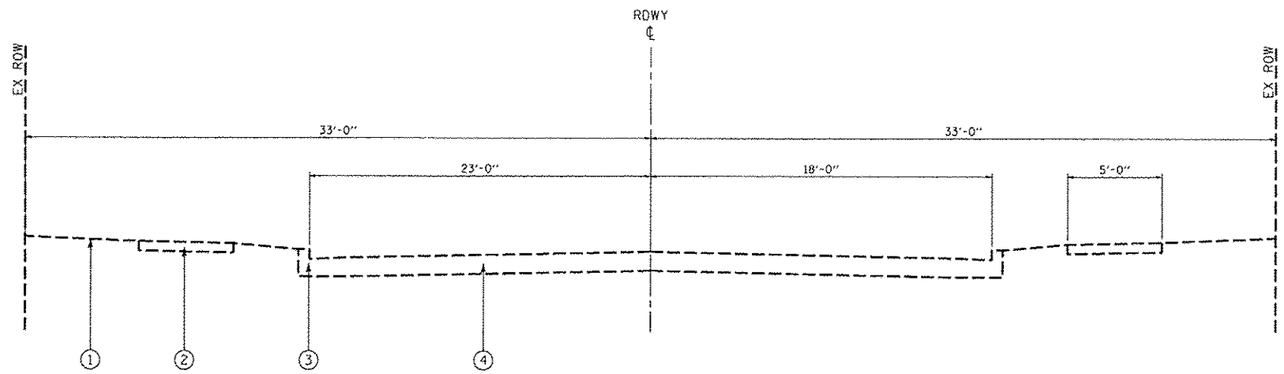

NTS

EXISTING TYPICAL SECTION

STA 108+80.00 TO STA 112+81.50

LEGEND

EXISTING

1. EARTH SURFACE
2. SIDEWALK
3. CURB AND GUTTER
4. PAVEMENT

PROPOSED

- (A) GRADING AND SHAPING BIKEWAY AND SEEDING, CLASS 1
- (B) SIDEWALK REMOVAL
- (C) PCC SIDEWALK 5"
- (E) COMBINATION CONCRETE CURB & GUTTER, TYPE B-6.12 (ABUTTING EX PAV)
- (F) MEDIAN (TO BE DONE BY OTHERS)
- (G) TOPSOIL FURNISH AND PLACE, 18"

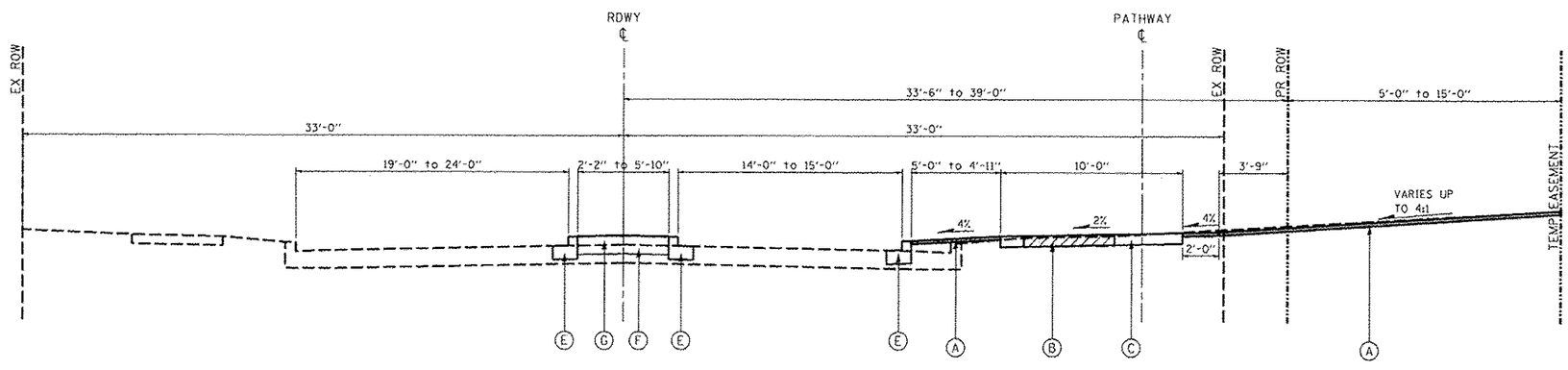

NTS

WITHOUT RETAINING WALL

PROPOSED TYPICAL SECTION

STA 108+80.00 TO STA 112+81.50

ESI CONSULTANTS, LTD
753 WINDSOR ROAD
CHARLESTON, IL 61920
(217) 348-1900
WWW.ESICONSULTANTSLTD.COM
ILLINOIS DEPARTMENT OF PROFESSIONAL REGULATION REGISTRATION #184-003685

CITY OF DANVILLE
1155 E. VOORHEES STREET
SUITE A
DANVILLE, IL 61832

NO.	DATE	DESCRIPTION OF REVISIONS	NO.	DATE	DESCRIPTION OF REVISIONS

SECTION NO. 06-00224-00-BT	ENGR: ADG
ESI PROJECT NO: 07-163-074-01	DRAWN BY: ADG
DATE: 10-31-2012	QCQA: DLC/PAT

LINCOLN PARK HISTORIC DIST SHARED USE PATH
CITY OF DANVILLE, VERMILION COUNTY

TYPICAL SECTIONS

SHEET 1 OF 4

DRAWING NO. **9A** OF 40

PRINTED DATE: 10/30/2012
PROJECT: 07-163-074-01 Danville Path Plan (Design)\CADD\OpenSheets\09A_TS 05.dgn