F.A.U. RTE.	SECTION	COUNTY	TOTAL SHEETS	SHEET NO.
	06-00016-00-BT	MADISON	310	166
FED. ROAD DIST. NO.	ILLINOIS	CONTRACT NO. 97433		

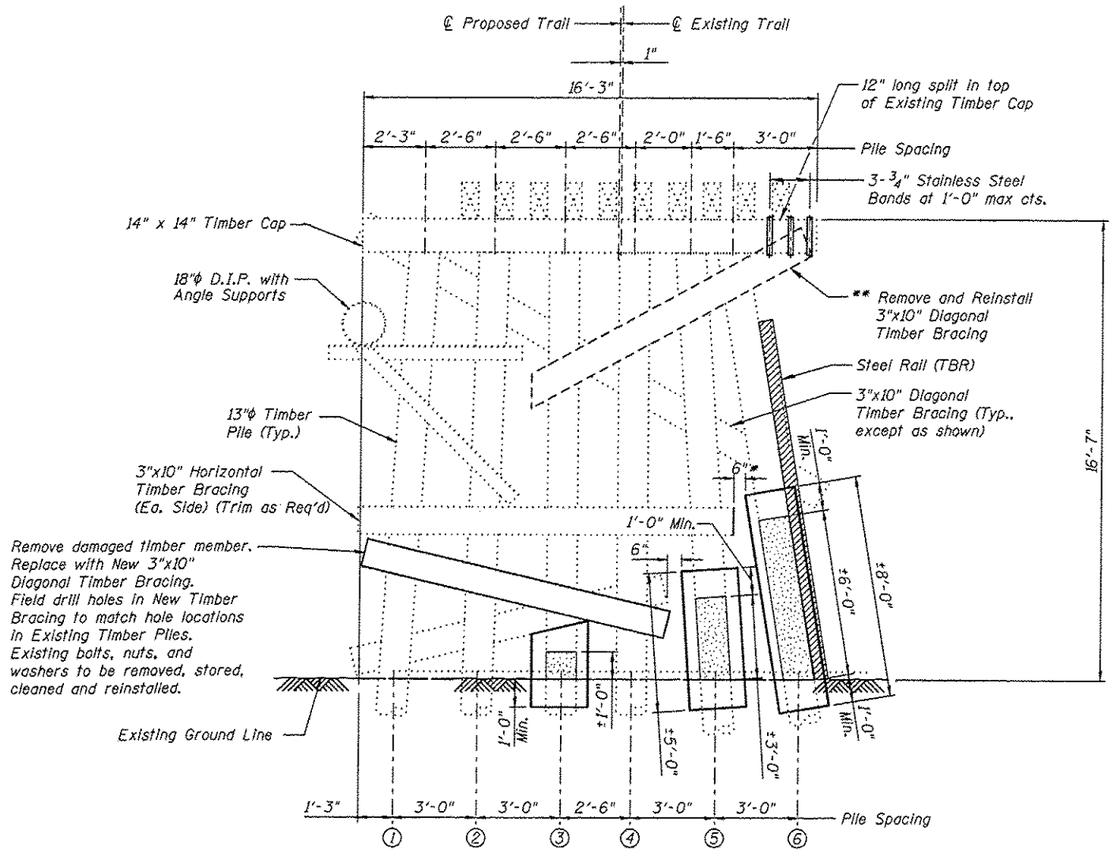

PIER 4
(Looking East)

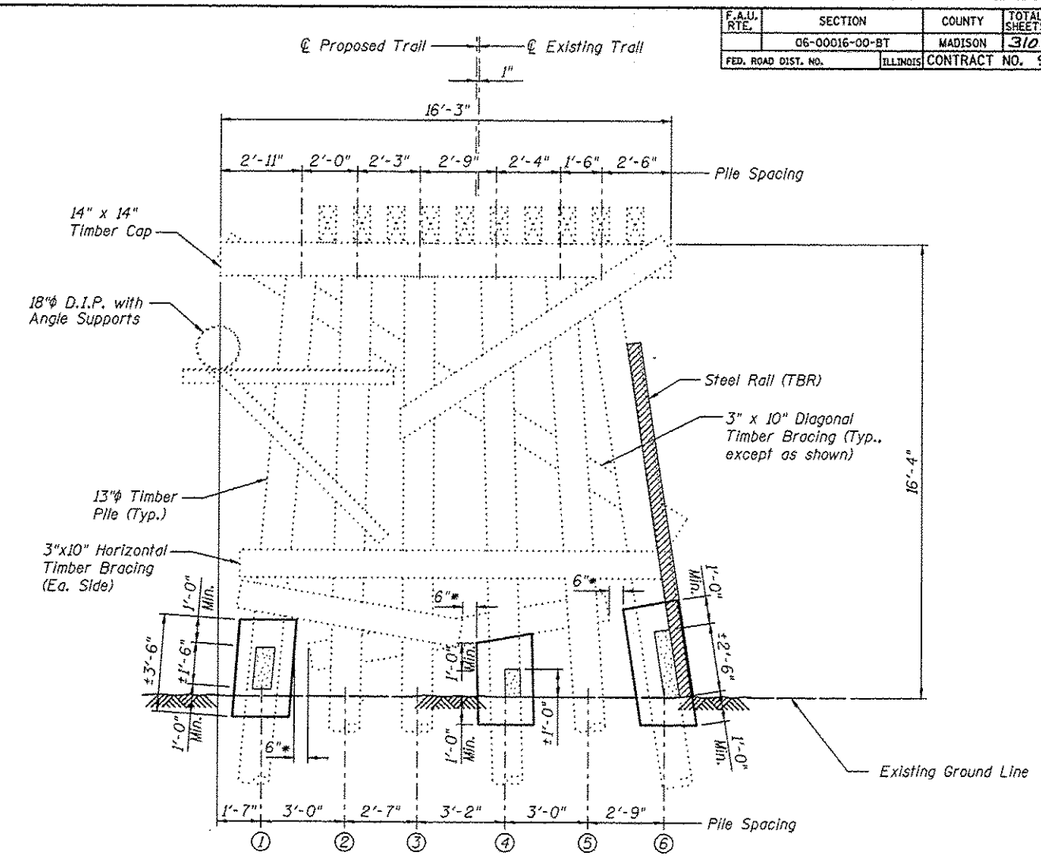

PIER 5
(Looking East)

Legend

Area of Deterioration

Removal

PIER 4
BILL OF MATERIAL

Item	Unit	Quantity
Treated Timber	F.B.M.	30
Concrete Encasement	Cu Yd	1.9
Stainless Steel Bands	Lin Ft	14

For estimated quantities for Concrete Encasement, see Special Provisions.

PIER 5
BILL OF MATERIAL

Item	Unit	Quantity
Concrete Encasement	Cu Yd	1.3

For estimated quantities, see Special Provisions.

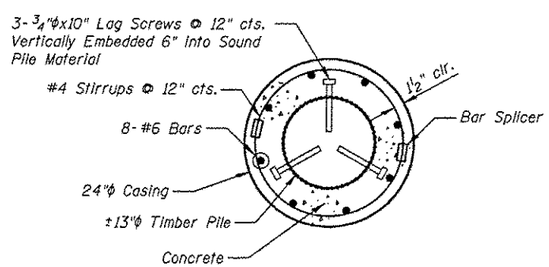

SECTION A-A

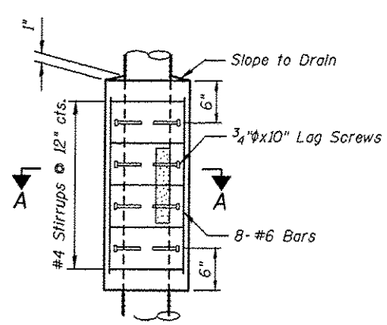

Payment for furnishing all material, labor and excavation necessary to construct the Concrete Encasement, including the casing, lag screws, concrete, reinforcement bars, bar splicers, partial removal of bracing, removal of steel rail, removal of deteriorated timber and all other appurtenances and incidental work as shown on this sheet, complete in place, will be considered completely covered by the contract unit price per cubic yard for Concrete Encasement.

CONCRETE ENCASEMENT DETAILS

Notes:

All dimensions are approximate.

The stainless steel bands shall be stainless steel with a minimum width of ¾" and a minimum thickness of 0.030" and shall be installed per the manufacturer's recommendation. Product data shall be submitted to the Engineer for approval prior to installation.

Concrete Encasement shall extend above and below the damaged area of the pile a minimum of 1'-0".

All new timber members shown shall be included in the pay item Treated Timber.

* Existing timber bracing that interferes with the Concrete Encasement shall be removed a max distance of 6" beyond the face of the Concrete Encasement. Cost included with Concrete Encasement.

** The existing timber bracing shall be reinstalled after the installation of the Stainless Steel Bands. Existing bolts, nuts, and washers to be removed, cleaned and reinstalled. Cost of removing and relocating the existing timber bracing shall be included with Stainless Steel Bands.

Sheet 8 of 10

PIER 4 & PIER 5 DETAILS

Juneau Associates, Inc. P.C.
CONSULTING ENGINEERS AND LAND SURVEYORS
2100 State Street, P.O. Box 1325, Granite City, Illinois 62040, Phone: (618)931-1000, Fax: (618)931-0241
100 North Research Drive, Edwardsville, Illinois 62025, Phone: (618)659-0900, Fax: (618)659-0941

GLEN CARBON HERITAGE
BIKE TRAIL OVER JUDY BRANCH
MADISON COUNTY
STATION 118+47.70
STRUCTURE NO. 2

REVISIONS			
NO.	DATE	BY	REMARKS

SCALE: NOT TO SCALE, FOLLOW DIMENSIONS

DSN. BY:	DB	DATE:	10/18/12	SHEET
DWN. BY:	EER	DATE:	10/18/12	166
CHK'D:	WWH	DATE:	10/18/12	
DGN NAME:		JOB NO. E064403	DGN. NO.	OF 310 SHTS

Printed 10:06:59 AM 12/19/2012 W:\STRUCT\E064403 IMCT Heritage Trail\Drawings\Structure #02\Proposed Structure (07-2012)\(08/66) Pier 4 & Pier 5.dgn