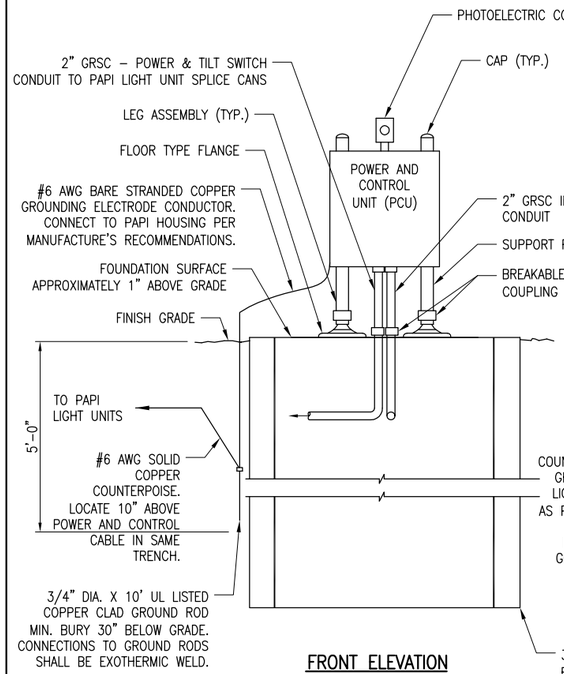

FRONT ELEVATION
POWER AND CONTROL UNIT
"NOT TO SCALE"

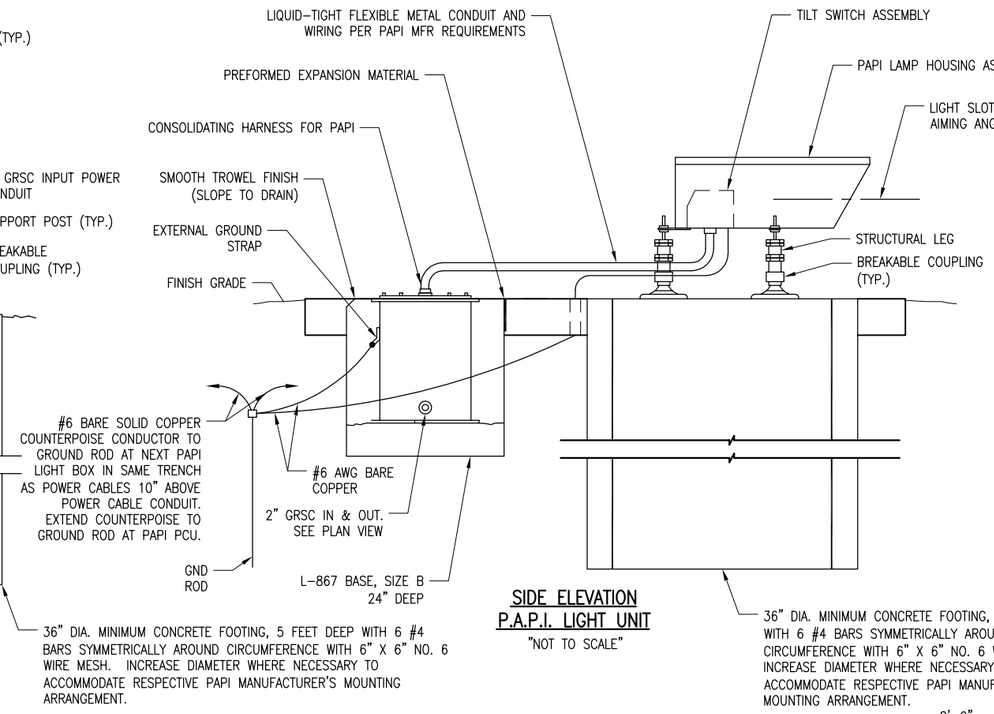

SIDE ELEVATION
P.A.P.I. LIGHT UNIT
"NOT TO SCALE"

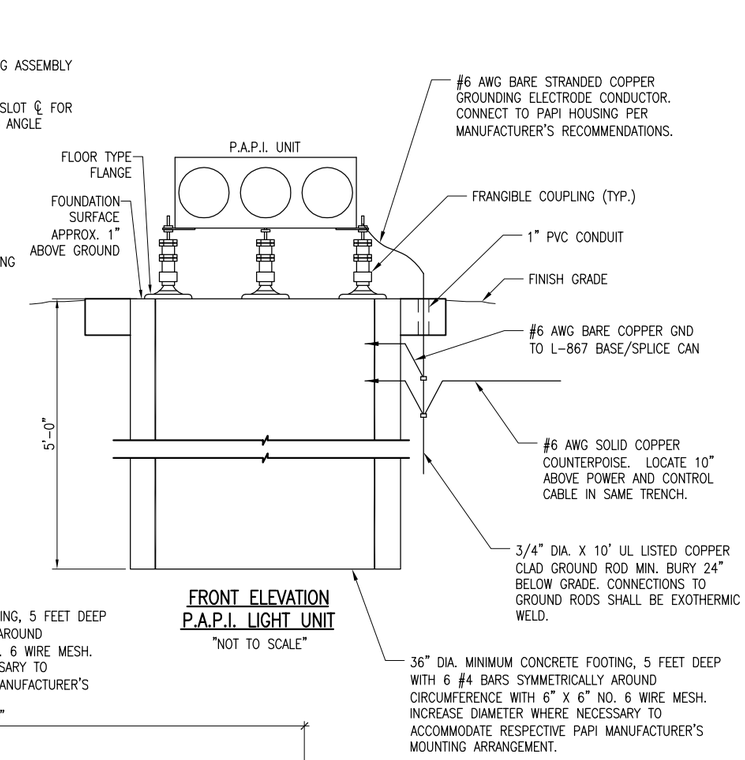

FRONT ELEVATION
P.A.P.I. LIGHT UNIT
"NOT TO SCALE"

GROUNDING FOR PAPI'S

1. GROUNDING FOR PAPI'S SHALL CONFORM TO THE RESPECTIVE PAPI MANUFACTURER'S INSTALLATION INSTRUCTIONS. AS DETAILED ON THE PLANS AND AS SPECIFIED HEREIN. THE POWER CIRCUIT TO EACH PAPI UNIT INCLUDING THE PAPI PCU (POWER AND CONTROL UNIT) SHALL INCLUDE ON EQUIPMENT GROUND WIRE OF THE SAME SIZE AND TYPE AS THE PHASE CONDUCTORS. FURNISH AND INSTALL A 3/4–INCH DIAMETER BY 20–FEET LONG COPPER CLAD GROUND ROD AT THE PAPI PCU AND AT EACH PAPI LIGHTING UNIT. BOND EACH PAPI UNIT (PCU AND LIGHTING UNITS) AND THE RESPECTIVE L–867 SPLICE CAN TO THE RESPECTIVE GROUND ROD WITH A #6 AWG STRANDED COPPER GROUNDING ELECTRODE CONDUCTOR. TOP OF GORUND RODS SHALL BE BURIED APPROXIMATELY 24 INCHES BELOW GRADE. ALL CONNECTIONS TO GROUND RODS SHALL BE MADE WITH EXOTHEMIC WELD TYPE CONNECTORS; CADWELD BY ERICO PRODUCTS, IN SOLON, OHIO (PHONE: 800–248–9353), THERMOWELD BY CONTINENTAL INDUSTRIES, INC., TULSA, OKLAHOMA (PHONE: 918–663–1440), OR ULTRAWELD BY HARGER LIGHTENING PROTECTION GROUNDING EQUIPMENT, GRAYSLAKE, ILLINOIS (PHONE: 800–842–7437), OR APPROVED EQUAL. CONNECTIONS TO L–867 SPLICE CANS SHALL BE WITH UL LISTED GROUNDING CONNECTORS SUITABLE FOR USE IN DIRECT BURIAL OR CONCRETE ENCASEMENT APPLICATIONS. CONNECTIONS TO PAPI UNIT FRAME SHALL BE AS RECOMMENDED BY THE MANUFACTURER OR WITH A UL LISTED GROUNDING CONNECTOR. ALL GROUND RODS ASSOCIATED WITH THE COMPLETE PAPI INSTALLATION SHALL BE BONDED TOGETHER WITH A #6 AWG SOLID COPPER COUNTERPOISE CONDUCTOR. THIS COUNTERPOISE CONDUCTOR SHALL BE INSTALLED IN THE SAME TRENCH LOCATED 10 INCHES ABOVE THE POWER AND CONTROL CONDUCTORS, BETWEEN EACH RESPECTIVE PAPI UNIT (PCU AND/OR LIGHT HOUSING UNIT).

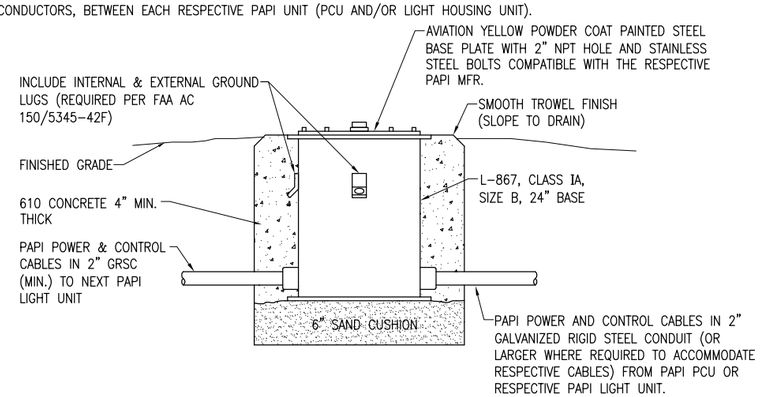

NOTE:
FOR THE PURPOSE OF ENHANCING SAFETY, EACH BASE MUST HAVE INSTALLED, BY THE MANUFACTURER, AND INTERNAL AND EXTERNAL GROUND STRAP THAT IS AVAILABLE FOR THE PURPOSE OF ATTACHING A GROUND LUG THAT IS CONNECTED TO AN EARTH GROUND OR A SAFETY GROUND CONDUCTOR INSTALLED WITH THE RESPECTIVE CIRCUIT. FOR AIRPORT PROJECTS RECEIVING FEDERAL, FUNDS THIS REQUIREMENT IS MANDATORY PER FAA AC 150/5345–42F.

PAPI L–867 SPLICE CAN DETAIL

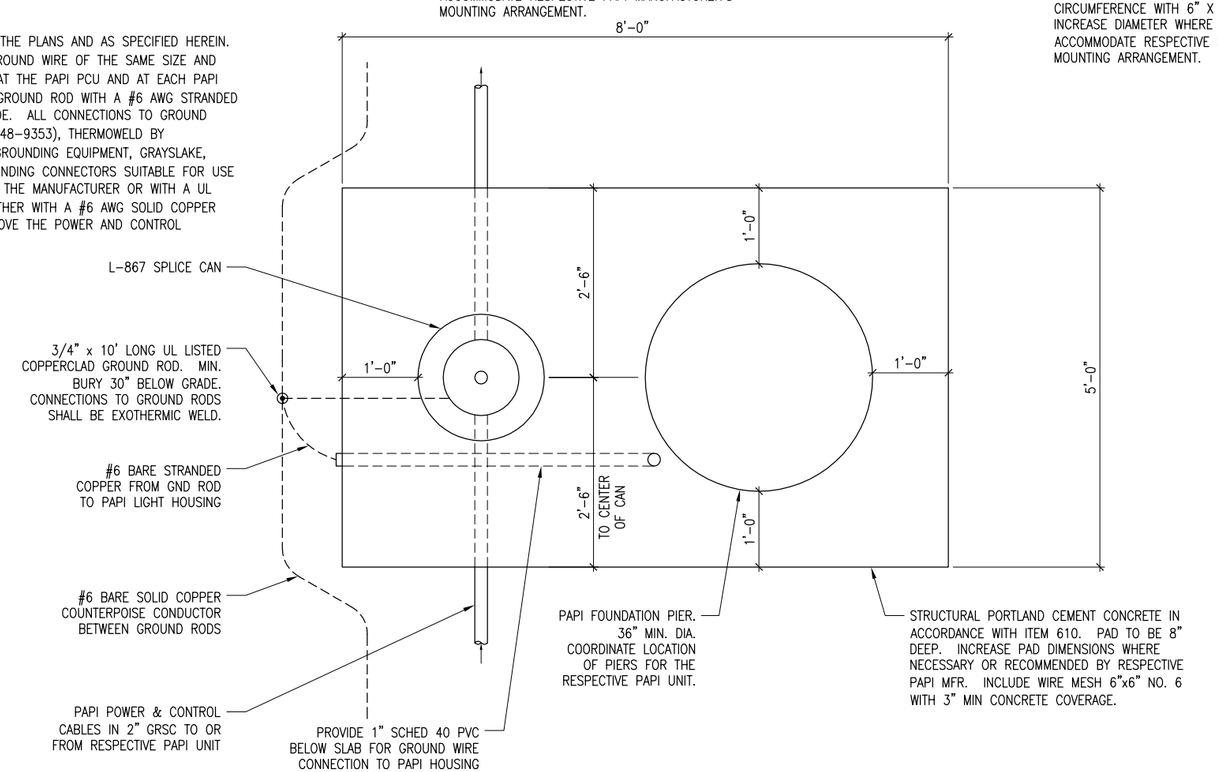

CONCRETE PAD/FOUNDATION PLAN VIEW

DATE	REVISION
12/11/12	UPDATED FOUNDATION DETAIL

MARSHALL COUNTY AIRPORT
LACON, ILLINOIS

IL PROJ.: C75-4223 BLOCK GRANT PROJ.: 3-17-0059-B15

Hanson Proj. No. 10A0051
Filename R-544ELE.DWG
Scale NOT TO SCALE
Date 12/14/12

LAYOUT	KNL	08/27/10
DRAWN	MLH	09/02/10
REVIEWED	KNL/CAH	03/30/11

HANSON
© Copyright Hanson Professional Services Inc. 2013
Hanson Professional Services Inc.
1525 South Sixth Street
Springfield, Illinois 62703-2886
Ph: (217) 788-2450 Fax: (217) 788-2503
www.hanson-inc.com
Offices Nationwide

PAVE, LIGHT AND MARK
805' EXTENSION

PAPI FOUNDATION DETAILS

JAN 10, 2013 3:34 PM KINGA00394
E:\AIRPORTS\MARSHALL\10A0051\AIRPORT\SHEETS\R-544ELE.DWG