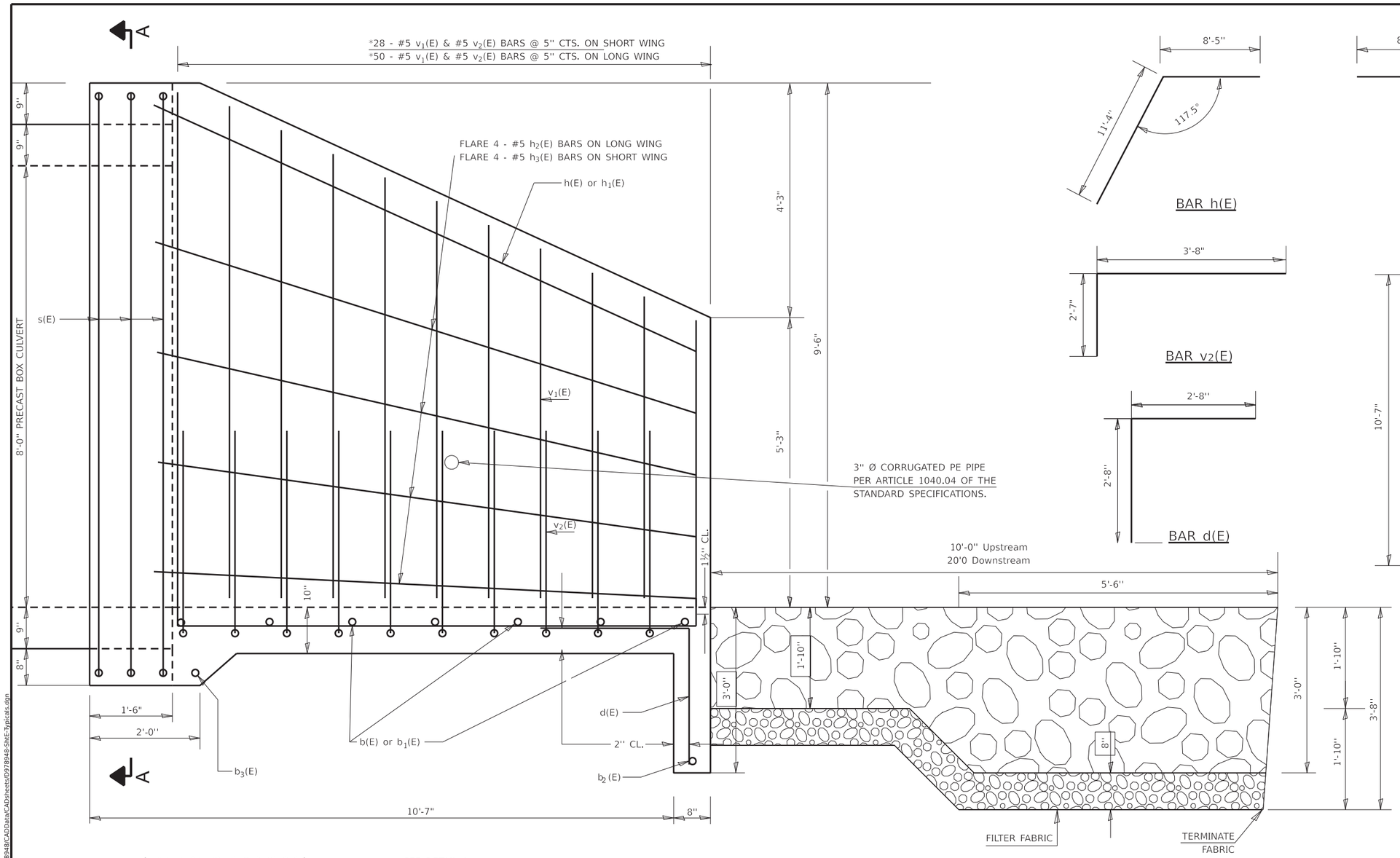

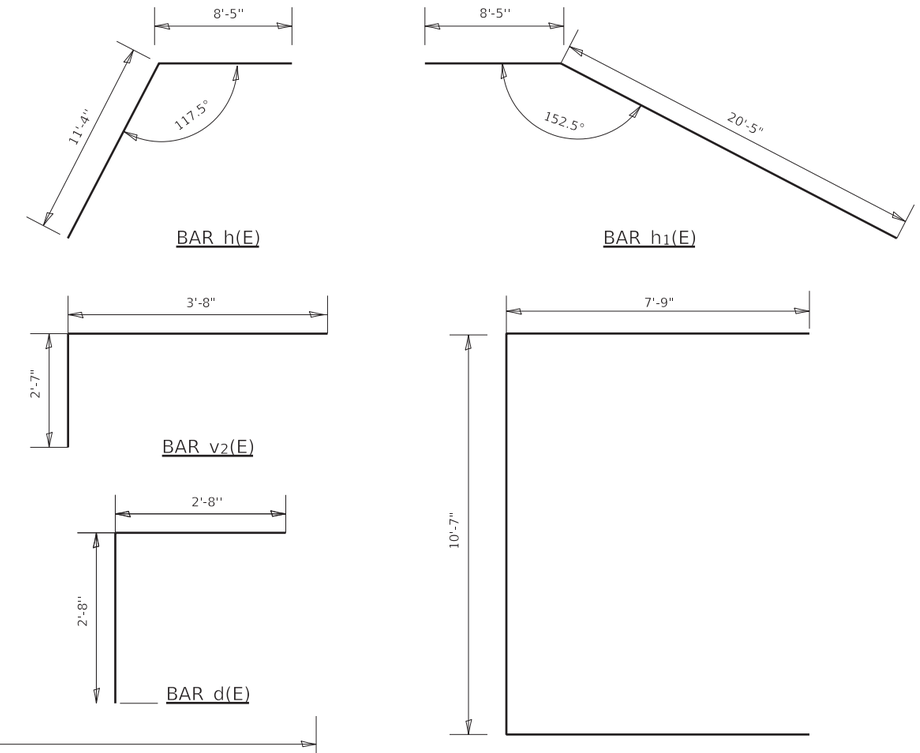

DESIGN STRESSES
f_y= 60,000 PSI
f_c' = 3,500 PSI

WORK THIS SHEET WITH PAGE 18 OF 28

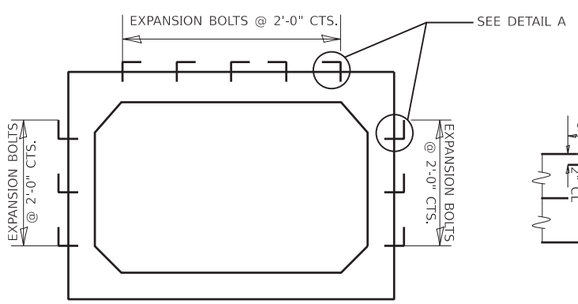

SECTION A-A

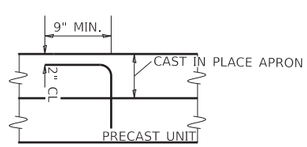

DETAIL A

BILL OF MATERIAL - 2 APRONS

BAR	NO.	SIZE	LENGTH	SHAPE
a(E)	76	#4	9'-7"	
b(E)	7	#4	30'-0"	
b_1(E)	14	#4	16'-6"	
b_2(E)	4	#4	21'-4"	
b_3(E)	2	#4	18'-4"	
d(E)	80	#4	5'-4"	
h(E)	2	#5	19'-9"	
h_1(E)	2	#5	28'-10"	
h_2(E)	8	#5	20'-5"	
h_3(E)	8	#5	11'-4"	
s(E)	12	#4	26'-1"	
v_1(E)	78	#5	14'-1"	
v_2(E)	156	#5	6'-3"	
CONCRETE BOX CULVERTS			CU. YD.	37.7
REINFORCEMENT BARS, EPOXY COATED			POUND	2,870

GENERAL NOTES:

THE CAST-IN-PLACE APRON END SECTION SHALL BE TIED TO THE PRECAST BARREL AT EACH END USING EXPANSION BOLTS SPACED AT 2' CENTERS AS SHOWN IN SECTION A-A. EXPANSION BOLTS SHALL BE 3/4" DIAMETER HOOKED BOLTS. THE HOOKS SHALL BE AS SHOWN IN DETAIL A AND SHALL BE BENT IN THE FIELD AS NEEDED. COST INCLUDED IN PRECAST CONCRETE BOX CULVERTS OF THE SIZE SPECIFIED IN THE PLANS.

REINFORCEMENT BARS DESIGNATED (E) SHALL BE EPOXY COATED.

CUT OR BEND TO FIT

REINFORCEMENT BARS SHALL CONFORM TO THE REQUIREMENTS OF ASTM A 706.

EXPOSED EDGES SHALL BE BEVELED ¾"

CAST-IN-PLACE END SECTION DETAILS
JOHNSON COUNTY
SN 044-7100 (P)

⚠1 REVISED SHEET 2-21-2024

MODEL: Apron End Section Details 1 [Sheet]
FILE NAME: pw://ildot-pw.bentley.com:PWIDOT/Documents/IDOT Offices/District 9/ORB Projects/78948/CADData/CADsheets/D978948-SHE-Typicals.dgn

USER NAME = zachary.lomax	DESIGNED -	REVISED -	
	DRAWN -	REVISED -	
PLOT SCALE = 0.16666633 ' / in.	CHECKED -	REVISED -	
PLOT DATE = 10/20/2023	DATE -	REVISED -	

STATE OF ILLINOIS
DEPARTMENT OF TRANSPORTATION

APRON END SECTION DETAILS
SN 044-7100 (P)

SCALE: NO SCALE | SHEET 17 OF 28 SHEETS | STA. TO STA.

F.A.P. RTE.	SECTION	COUNTY	TOTAL SHEETS	SHEET NO.
885	110CR-1	JOHNSON	28	17
		CONTRACT NO. 78948		
		ILLINOIS	FED. AID PROJECT	