09A
IDOT LETTING MARCH 8, 2024

DU093
TOTAL SHEETS = 20

DUPAGE AIRPORT AUTHORITY
WEST CHICAGO, ILLINOIS

CONSTRUCTION PLANS
FOR
DUPAGE AIRPORT

REHABILITATE AIRFIELD PAVEMENTS/ISOLATED PAVEMENT REPLACEMENTS; RUNWAY 2L/20R AND 2R/20L, TAXIWAY C AND W

ILLINOIS PROJECT: DPA-5065
SBGP PROJECT: 3-17-SBGP-TBD

JANUARY 12, 2024

DESIGN INFORMATION
APPROACH CATEGORY D TAXIWAY DESIGN GROUP 2B

DUPAGE AIRPORT	
TOWNSHIP: 40 NORTH RANGE: 9 EAST DUPAGE COUNTY	WAYNE TOWNSHIP (SECTIONS: 31)

811 Know what's **below.** **Call** before you dig.

J.U.L.I.E.
JOINT UTILITY LOCATING
INFORMATION FOR EXCAVATORS
www.illinois1call.com

THE LOCATION, SIZE AND TYPE OF MATERIAL OF EXISTING UNDERGROUND UTILITIES INDICATED ON THE PLANS IS NOT REPRESENTED AS BEING ACCURATE, SUFFICIENT OR COMPLETE IT SHALL BE THE CONTRACTOR'S RESPONSIBILITY TO DETERMINE ACTUAL LOCATIONS OF ALL SUCH FACILITIES, INCLUDING SERVICE CONNECTIONS TO UNDERGROUND UTILITIES. PRIOR TO CONSTRUCTION, THE CONTRACTOR SHALL NOTIFY UTILITY COMPANIES OF HIS OPERATIONAL PLANS, OBTAIN FROM RESPECTIVE UTILITY COMPANIES DETAILED INFORMATION AND ASSISTANCE RELATIVE TO THE LOCATION OF THEIR FACILITIES AND THE WORKING SCHEDULE OF THE COMPANIES FOR REMOVAL OR ADJUSTMENT WHERE REQUIRED. IN THE EVENT AN UNEXPECTED UTILITY INTERFERENCE IS ENCOUNTERED DURING CONSTRUCTION, THE CONTRACTOR SHALL IMMEDIATELY NOTIFY THE UTILITY COMPANY OF JURISDICTION AND THE ONE-CALL NOTICE SYSTEM. THE ENGINEER SHALL ALSO BE IMMEDIATELY NOTIFIED. ANY SUCH UTILITY OR SERVICES SHALL BE RESTORED TO SERVICE AT ONCE AND PAID FOR BY THE CONTRACTOR AT NO ADDITIONAL COST TO THE CONTRACT.

CALL J.U.L.I.E. FOR UTILITY INFORMATION AT 811.

PROJECT LOCATION

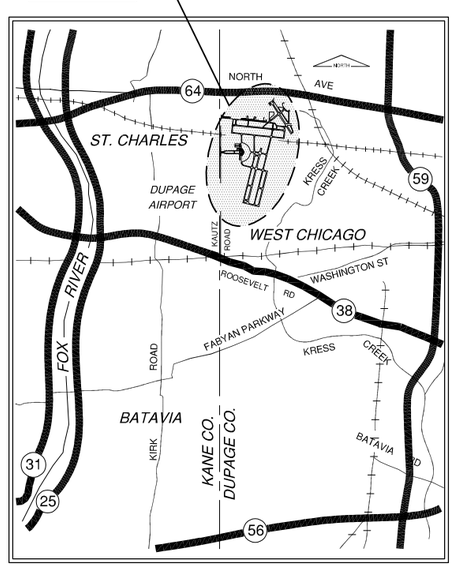

LOCATION MAP

PROJECT LOCATION

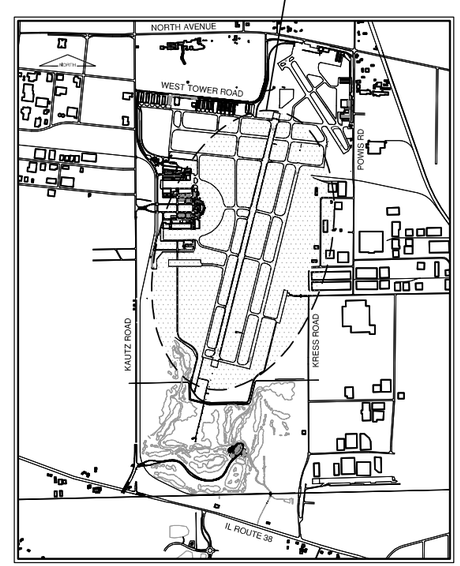

SITE PLAN

CMT
CRAWFORD, MURPHY & TILLY, INC.
CONSULTING ENGINEERS
License No. 184-000613

22004585-00

DANIEL L. PAPE 062-047269 REGISTERED PROFESSIONAL ENGINEER OF ILLINOIS
Expires 11/30/25

SUBMITTED BY _____
DANIEL L. PAPE, P.E.
DATE 1/12/2024 DATE

DuPage Airport Authority
DuPage Airport
2700 INTERNATIONAL DRIVE
SUITE 200
WEST CHICAGO, IL. 60185

APPROVED BY _____
MARK DOLES
EXECUTIVE DIRECTOR
DATE 1/12/2024 DATE

INDEX TO SHEETS

1. COVER SHEET
2. INDEX TO SHEETS-SUMMARY OF QUANTITIES
3. SITE PLAN-CONTRACTOR'S ACCESS AND STORAGE
4. CONSTRUCTION SAFETY AND PHASING PLAN - 1
5. CONSTRUCTION SAFETY AND PHASING PLAN - 2
6. CONSTRUCTION SAFETY AND PHASING PLAN - 3
7. CONSTRUCTION SAFETY AND PHASING PLAN GENERAL NOTES - 1
8. CONSTRUCTION SAFETY AND PHASING PLAN GENERAL NOTES - 2
9. CONSTRUCTION SAFETY AND PHASING DETAILS
10. REHABILITATE RUNWAY 2L-20R - 1
11. REHABILITATE RUNWAY 2L-20R - 2
12. REHABILITATE TAXIWAY C - 1
13. REHABILITATE TAXIWAY C - 2
14. REHABILITATE TAXIWAY C-3 AND RUNWAY 2R-20L
15. REHABILITATE TAXIWAY W, L AND G
16. REHABILITATE FLIGHT CENTER APRON
17. PAVEMENT JOINTING DETAILS - 1
18. PAVEMENT JOINTING DETAILS - 2
19. TYPICAL SECTIONS
20. PAVEMENT MARKING DETAILS

BORING/CORING INFORMATION

B-1
1.5" ASPHALT SURFACE MIX
5.5" ASPHALT BINDER MIX
9.0" CONCRETE
26.4" CLAY, BROWN, HARD
60" SILTY CLAY, GRAY, VERY STIFF
18" CLAY LOAM, GRAY, HARD

B-2
8.5" CONCRETE
4.0" ASPHALT BINDER MIX
30" CLAY, BROWN AND GRAY, STIFF
60" SAND, BROWN, MEDIUM DENS
18" SILTY CLAY LOAM, GRAY, SOFT

B-3
9.0" CONCRETE
3.0" ASPHALT
60" SANDY CLAY WITH GRAVEL, GRAY, VERY STIFF TO HARD
30" SILTY CLAY LOAM, BROWN AND GRAY, SOFT TO MEDIUM STIFF
18" CLAYEY SAND AND GRAVEL, BROWN

DATA FROM GEOTECHNICAL INVESTIGATION REPORT COMPLETED IN JANUARY 2024

SUMMARY OF QUANTITIES

ITEM NO.	DESCRIPTION	UNIT	ESTIMATED QUANTITY	RECORD QUANTITY
BASE BID				
AR150510	ENGINEER'S FIELD OFFICE	L SUM	1	
AR150520	MOBILIZATION	L SUM	1	
AR152410	UNCLASSIFIED EXCAVATION	CU YD	128	
AR209604	CRUSHED AGG. BASE COURSE - 4"	SQ YD	1080	
AR401610	BITUMINOUS SURFACE COURSE	TON	185	
AR401650	BITUMINOUS PAVEMENT MILLING	SQ YD	1600	
AR403610	BITUMINOUS BASE COURSE	TON	185	
AR501508	8" PCC PAVEMENT	SQ YD	1045	
AR501530	PCC TEST BATCH	EACH	1	
AR501550	PCC PAVEMENT MILLING	SQ YD	35	
AR501900	REMOVE PCC PAVEMENT	SQ YD	1045	
AR603510	BITUMINOUS TACK COAT	GALLON	315	
AR620520	PAVEMENT MARKING - WATERBORNE	SQ FT	939	
AR620525	PAVEMENT MARKING - BLACK BORDER	SQ FT	737	
ADDITIVE ALTERNATE NO. 1				
AS152410	UNCLASSIFIED EXCAVATION	CU YD	35	
AS209604	CRUSHED AGG. BASE COURSE - 4"	SQ YD	310	
AS800046	8" PCC PAVEMENT - HIGH EARLY MIX	SQ YD	310	
AS501900	REMOVE PCC PAVEMENT	SQ YD	310	
AS620520	PAVEMENT MARKING - WATERBORNE	SQ FT	335	
AS620525	PAVEMENT MARKING - BLACK BORDER	SQ FT	70	
ADDITIVE ALTERNATE NO. 2				
AT501550	PCC PAVEMENT MILLING	SQ YD	350	
ADDITIVE ALTERNATE NO. 3 - LOCAL ONLY FUNDING				
AU152410	UNCLASSIFIED EXCAVATION	CU YD	10	
AU209604	CRUSHED AGG. BASE COURSE - 4"	SQ YD	85	
AU501550	PCC PAVEMENT MILLING	SQ YD	136	
AU800046	8" PCC PAVEMENT - HIGH EARLY MIX	SQ YD	85	
AU501900	REMOVE PCC PAVEMENT	SQ YD	85	
AU620520	PAVEMENT MARKING - WATERBORNE	SQ FT	66	
AU620525	PAVEMENT MARKING - BLACK BORDER	SQ FT	29	

CMT

CONSULTANTS

100% FINAL
JANUARY 12, 2024

REHAB AIRFIELD PAVEMENTS
FED

DuPage Airport Authority

OWNER

DUPAGE AIRPORT
WEST CHICAGO, ILLINOIS

MARK	DATE	DESCRIPTION

AIP PROJ. NO.
DPA 5065
CMT PROJECT NO: 22004585.00
CAD DWG FILE: 22004585 - DPA - QUANTITIES.DWG
DESIGNED BY: AM
DRAWN BY: JRO
CHECKED BY: DKP
APPROVED BY: DLP
COPYRIGHT:

SHEET TITLE
INDEX TO SHEETS-SUMMARY OF QUANTITIES

SHEET 2 OF 20

Path: K:\DupageAp\22004585-00_RehabAirfieldPavementsFED\Draw\Sheets\22004585 - dpa - quantities.dwg
Date: Wednesday, January 31, 2024 4:09:18 PM

LEGEND

- PCC PAVEMENT REHABILITATION GENERAL AREA (SEE NOTE 1)
- BITUMINOUS MILL AND OVERLAY (SEE NOTE 2)
- PCC MILLING
- CONTRACTOR'S STAGING AND STORAGE AREA
- BORING LOCATION (SEE PAGE 2 FOR INFORMATION)

NOTES

1. EXISTING PCC PAVEMENT SECTIONS ARE 8" PCC PAVEMENT ON 4" ASPHALT TREATED PERMEABLE SUBBASE (ATPS) SHALL BE REMOVED AND REPLACED WITH NEW 8" PCC PAVEMENT ON NEW 4" CRUSHED AGGREGATE BASE COURSE.
2. THE BITUMINOUS SECTION OF TAXIWAY C SHALL BE MILLED 4" DEEP AND CONSTRUCT NEW 2" BITUMINOUS SURFACE COURSE AND NEW 2" BITUMINOUS BASE COURSE.

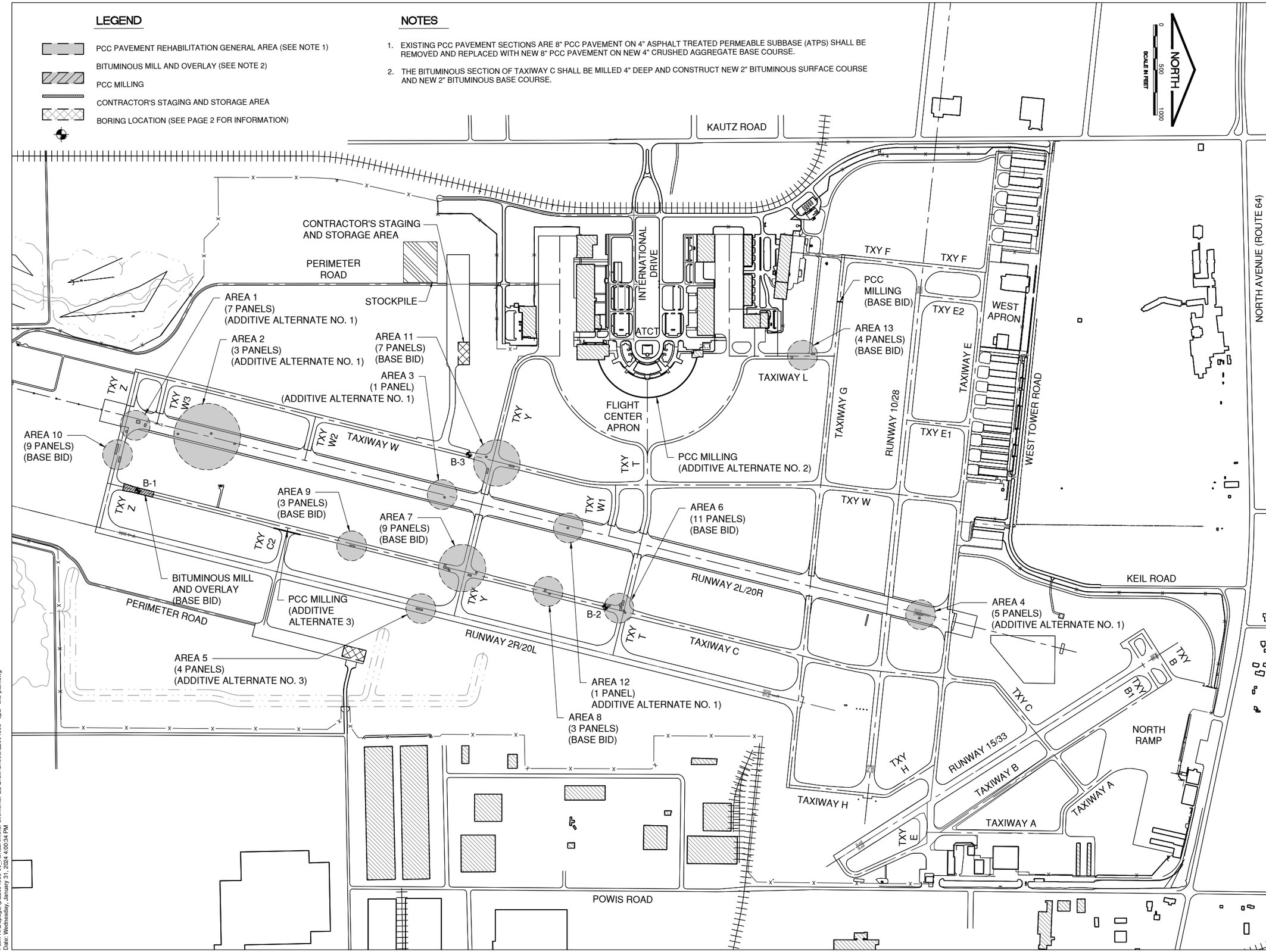

CMT

CONSULTANTS

100% FINAL
JANUARY 12, 2024

REHAB AIRFIELD PAVEMENTS
FED

DuPage Airport Authority

OWNER

DUPAGE AIRPORT
WEST CHICAGO, ILLINOIS

MARK	DATE	DESCRIPTION

AIP PROJ. NO.	
DPA 5065	
CMT PROJECT NO:	22004585.00
CAD DWG FILE:	22004585 - DPA - SITE PLAN.DWG
DESIGNED BY:	AM
DRAWN BY:	JRO
CHECKED BY:	DKP
APPROVED BY:	DLP
COPYRIGHT:	

SHEET TITLE

SITE PLAN-CONTRACTORS ACCESS AND STORAGE

SHEET 3 OF 20

Path: K:\DupageAp\22004585-00_RehabAirfieldPavementsFED\Draw\Sheets\22004585 - dpa - site plan.dwg
Date: Wednesday, January 31, 2024 4:00:34 PM

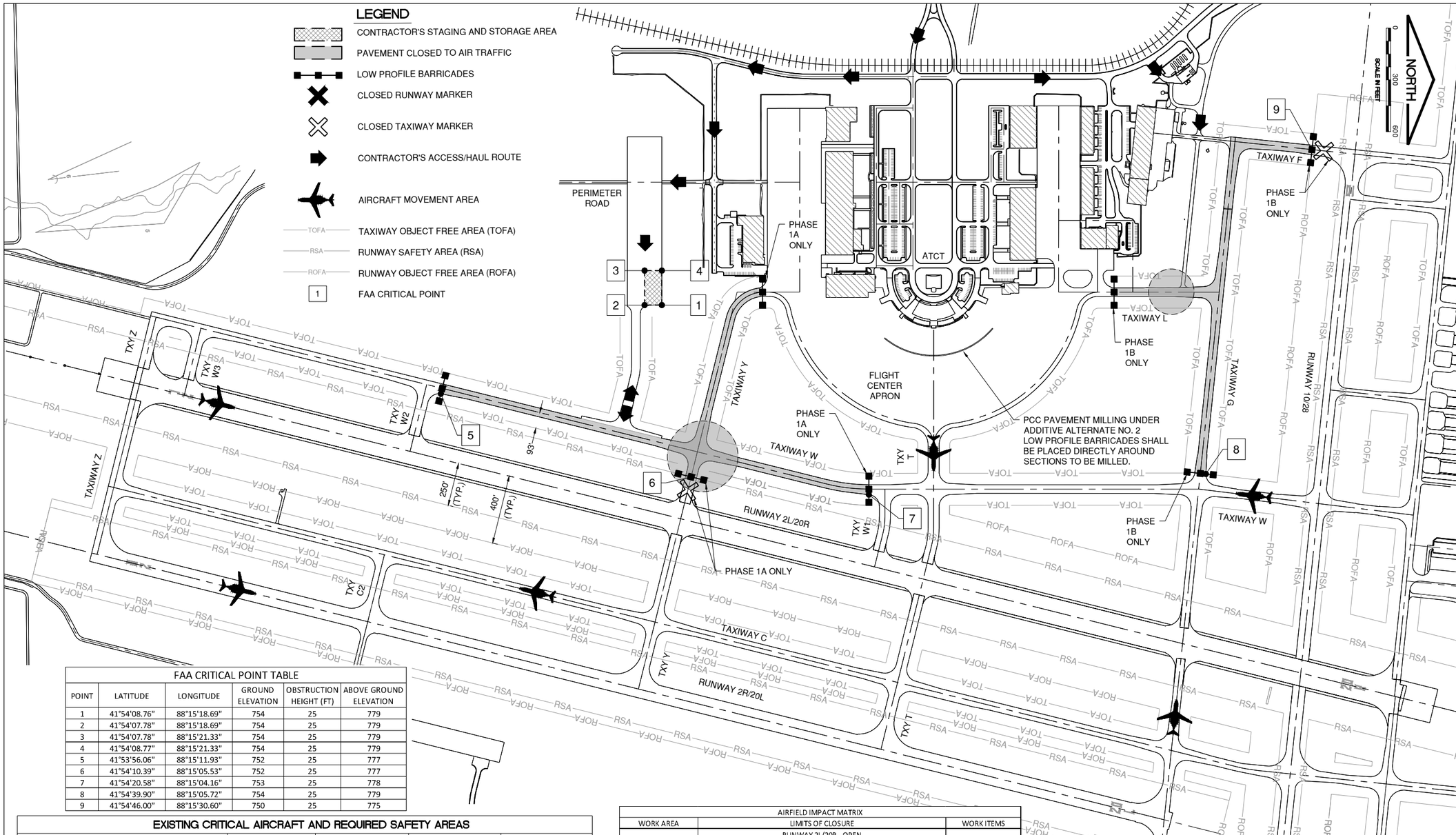

FAA CRITICAL POINT TABLE					
POINT	LATITUDE	LONGITUDE	GROUND ELEVATION	OBSTRUCTION HEIGHT (FT)	ABOVE GROUND ELEVATION
1	41°54'08.76"	88°15'18.69"	754	25	779
2	41°54'07.78"	88°15'18.69"	754	25	779
3	41°54'07.78"	88°15'21.33"	754	25	779
4	41°54'08.77"	88°15'21.33"	754	25	779
5	41°53'56.06"	88°15'11.93"	752	25	777
6	41°54'10.39"	88°15'05.53"	752	25	777
7	41°54'20.58"	88°15'04.16"	753	25	778
8	41°54'39.90"	88°15'05.72"	754	25	779
9	41°54'46.00"	88°15'30.60"	750	25	775

EXISTING CRITICAL AIRCRAFT AND REQUIRED SAFETY AREAS				
RUNWAY	2L/20R	2R/20L	10/28	15/33
APPROACH CATEGORY	D	C	B	B
DESIGN GROUP	III	II	II	II
DESIGN AIRCRAFT	BBJ	CHALLENGER 850	FALCON 900	KING AIR C90-1
WINGSPAN	117.4 FEET	69.6 FEET	63.4 FEET	50.2 FEET
TAIL HEIGHT	41.1 FEET	20.4 FEET	24.8 FEET	14.2 FEET
STRENGTH (MGTW)	171,000 LBS.	53,000 LBS.	45,500 LBS.	9,650 LBS.
LENGTH	BBJ	CHALLENGER 850	FALCON 900	KING AIR C90-1
(1) RUNWAY SAFETY AREA WIDTH (RSA)	500 (250' FROM ℄)	400 (200' FROM ℄)	150 (75' FROM ℄)	150 (75' FROM ℄)
(2) RUNWAY OBJECT FREE AREA WIDTH (ROFA)	800 (400' FROM ℄)	800 (400' FROM ℄)	500 (250' FROM ℄)	500 (250' FROM ℄)
TAXIWAY SAFETY AREA WIDTH (TSA)	118 (59' FROM ℄)	79 (39.5' FROM ℄)	79 (39.5' FROM ℄)	79 (39.5' FROM ℄)
(1)(2) TAXIWAY OBJECT FREE AREA WIDTH (TOFA)	186 (93' FROM ℄)	131 (65.5' FROM ℄)	131 (65.5' FRM ℄)	131 (65.5' FRM ℄)

1. NO CONSTRUCTION WITHIN THESE LIMITS WILL BE ALLOWED WITHOUT THE RUNWAY AND / OR TAXIWAY BEING CLOSED.
2. NO CONSTRUCTION EQUIPMENT SHALL BE PARKED / STORED WITHIN THE OBJECT FREE AREA(S) OF OPEN RUNWAYS AND / OR TAXIWAYS AND THE PARKED / STORED EQUIPMENT HEIGHT SHALL NOT PENETRATE THE PART 77 SURFACE(S).
3. ADDITIVE ALTERNATE WORK ON THE FLIGHT CENTER APRON CAN BE COMPLETED DURING ANY PHASE.

AIRFIELD IMPACT MATRIX		
WORK AREA	LIMITS OF CLOSURE	WORK ITEMS
PHASE 1A	RUNWAY 2L/20R - OPEN	PCC PAVEMENT REPLACEMENT
	RUNWAY 2R/20L - OPEN	
	RUNWAY 10-28 - OPEN	
	RUNWAY 15-33 - OPEN	
	TAXIWAY W - CLOSED (BETWEEN TXY W1 AND TXY W2)	
	TAXIWAY Y - CLOSED (BETWEEN FLIGHT CENTER APRON AND RWY 2L/20R)	
	ALL OTHER TAXIWAYS OPEN	

AIRFIELD IMPACT MATRIX		
WORK AREA	LIMITS OF CLOSURE	WORK ITEMS
PHASE 1B	RUNWAY 2L/20R - OPEN	PCC PAVEMENT REPLACEMENT & PCC MILLING
	RUNWAY 2R/20L - OPEN	
	RUNWAY 10-28 - OPEN	
	RUNWAY 15-33 - OPEN	
	TAXIWAY F - CLOSED (SOUTH OF RWY 10/28)	
	TAXIWAY G - CLOSED (WEST OF TXY W)	
	TAXIWAY L - CLOSED	
	ALL OTHER TAXIWAYS OPEN	

NOTE: TAXIWAY F AND TAXIWAY G SHALL BE RE-OPENED TO AIRCRAFT TRAFFIC UPON COMPLETION OF THE PCC MILLING WORK ON TAXIWAY G

PHASE 1 NOTES

1. THIS PHASE SHALL INCLUDE ALL BASE BID WORK WEST OF THE RUNWAY 2L/20R RUNWAY SAFETY AREA.
2. IF ADDITIVE ALTERNATE NO. 2 IS AWARDED, THE PCC MILLING ON THE FLIGHT CENTER APRON IS RECOMMENDED TO BE COMPLETED DURING THIS PHASE.
3. PHASE 1A AND PHASE 1B SHALL NOT BE WORKED ON CONCURRENTLY WITH EACH OTHER, AS THE FLIGHT CENTER APRON MUST MAINTAIN TWO AIRCRAFT ACCESS POINTS AT ALL TIMES. IF PHASE 1A AND PHASE 1B ARE TO BE COMPLETED CONSECUTIVELY, THE NEW PCC PAVEMENT OF THE FIRST AREA MUST FINISH CURING AND ACHIEVE ACCEPTABLE STRENGTH TEST RESULTS BEFORE WORK ON THE OTHER CAN BEGIN.
4. UPON APPROVAL BY THE AIRPORT AND THE RESIDENT ENGINEER, WORK ON PHASE 1A AND/OR PHASE 1B MAY BE WORKED ON CONCURRENTLY WITH PHASE 2 OR PHASE 3.
5. AFTER THE NEW PCC HAS BEEN POURED FOR THE PANEL REPLACEMENTS UNDER THIS PHASE, THE WORK AREAS SHALL REMAIN CLOSED TO AIRCRAFT TRAFFIC WHILE THE PCC MIX CURES. WHEN PCC STRENGTH TESTING PRODUCES ACCEPTABLE RESULTS, THESE AREAS MAY BE RE-OPENED TO AIRCRAFT TRAFFIC.
6. WHEN THE CONTRACTOR'S EQUIPMENT, VEHICLES OR PERSONNEL NEED TO CROSS ACTIVE PAVEMENTS , THE CONTRACTOR WILL BE REQUIRED TO BE UNDER CONTROL BY A CROSSING GUARD OR ESCORT IN RADIO CONTACT WITH THE ATCT.

CMT

CONSULTANTS

100% FINAL
JANUARY 12, 2024

REHAB AIRFIELD PAVEMENTS
FED

DuPage Airport Authority

OWNER

DUPAGE AIRPORT
WEST CHICAGO, ILLINOIS

MARK	DATE	DESCRIPTION

AIP PROJ. NO.	
DPA 5065	
CMT PROJECT NO:	22004585.00
CAD DWG FILE:	22004585 - DPA - CSPP PLAN - 1.DWG
DESIGNED BY:	AM
DRAWN BY:	JRO
CHECKED BY:	DKP
APPROVED BY:	DLP
COPYRIGHT:	

SHEET TITLE

CONSTRUCTION SAFETY AND PHASING PLAN - 1

Path: K:\DupageAp\22004585-00_RehabAirfieldPavementsFED\Draw\Sheets\22004585 - dpa - cspp plan - 1.dwg
Date: Wednesday, January 31, 2024 11:15:32 AM

LEGEND

- CONTRACTOR'S STAGING AND STORAGE AREA
- PAVEMENT CLOSED TO AIR TRAFFIC
- LOW PROFILE BARRICADES
- CLOSED RUNWAY MARKER
- CLOSED TAXIWAY MARKER
- CONTRACTOR'S ACCESS/HAUL ROUTE
- AIRCRAFT MOVEMENT AREA
- TOFA — TAXIWAY OBJECT FREE AREA (TOFA)
- RSA — RUNWAY SAFETY AREA (RSA)
- ROFA — RUNWAY OBJECT FREE AREA (ROFA)
- 1 — FAA CRITICAL POINT

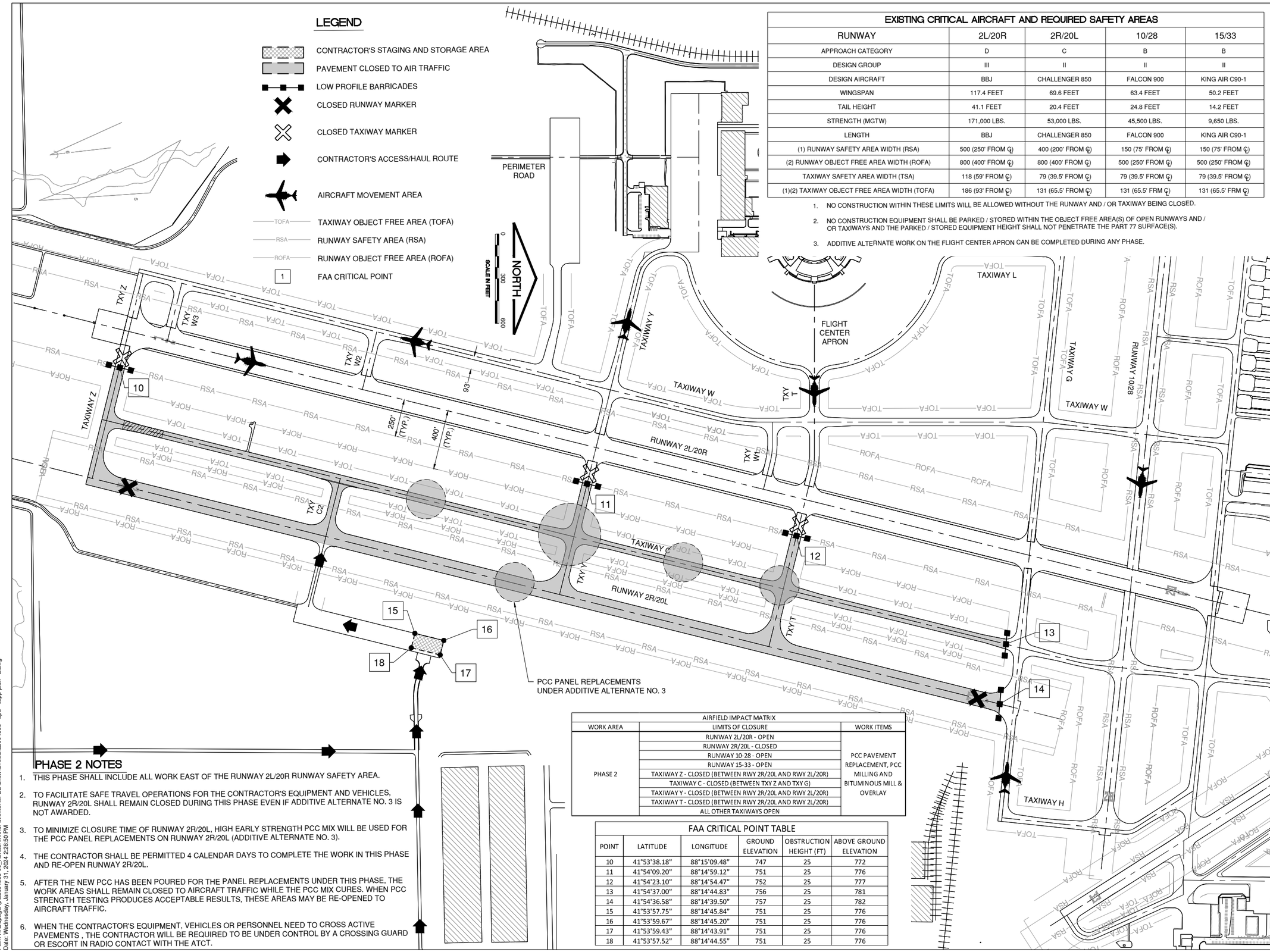

EXISTING CRITICAL AIRCRAFT AND REQUIRED SAFETY AREAS

RUNWAY	2L/20R	2R/20L	10/28	15/33
APPROACH CATEGORY	D	C	B	B
DESIGN GROUP	III	II	II	II
DESIGN AIRCRAFT	BBJ	CHALLENGER 850	FALCON 900	KING AIR C90-1
WINGSPAN	117.4 FEET	69.6 FEET	63.4 FEET	50.2 FEET
TAIL HEIGHT	41.1 FEET	20.4 FEET	24.8 FEET	14.2 FEET
STRENGTH (MGTW)	171,000 LBS.	53,000 LBS.	45,500 LBS.	9,650 LBS.
LENGTH	BBJ	CHALLENGER 850	FALCON 900	KING AIR C90-1
(1) RUNWAY SAFETY AREA WIDTH (RSA)	500 (250' FROM ℄)	400 (200' FROM ℄)	150 (75' FROM ℄)	150 (75' FROM ℄)
(2) RUNWAY OBJECT FREE AREA WIDTH (ROFA)	800 (400' FROM ℄)	800 (400' FROM ℄)	500 (250' FROM ℄)	500 (250' FROM ℄)
TAXIWAY SAFETY AREA WIDTH (TSA)	118 (59' FROM ℄)	79 (39.5' FROM ℄)	79 (39.5' FROM ℄)	79 (39.5' FROM ℄)
(1)(2) TAXIWAY OBJECT FREE AREA WIDTH (TOFA)	186 (93' FROM ℄)	131 (65.5' FROM ℄)	131 (65.5' FRM ℄)	131 (65.5' FRM ℄)

1. NO CONSTRUCTION WITHIN THESE LIMITS WILL BE ALLOWED WITHOUT THE RUNWAY AND / OR TAXIWAY BEING CLOSED.
2. NO CONSTRUCTION EQUIPMENT SHALL BE PARKED / STORED WITHIN THE OBJECT FREE AREA(S) OF OPEN RUNWAYS AND / OR TAXIWAYS AND THE PARKED / STORED EQUIPMENT HEIGHT SHALL NOT PENETRATE THE PART 77 SURFACE(S).
3. ADDITIVE ALTERNATE WORK ON THE FLIGHT CENTER APRON CAN BE COMPLETED DURING ANY PHASE.

AIRFIELD IMPACT MATRIX

WORK AREA	LIMITS OF CLOSURE	WORK ITEMS
PHASE 2	RUNWAY 2L/20R - OPEN	PCC PAVEMENT REPLACEMENT, PCC MILLING AND BITUMINOUS MILL & OVERLAY
	RUNWAY 2R/20L - CLOSED	
	RUNWAY 10-28 - OPEN	
	RUNWAY 15-33 - OPEN	
	TAXIWAY Z - CLOSED (BETWEEN RWY 2R/20L AND RWY 2L/20R)	
	TAXIWAY C - CLOSED (BETWEEN TXY Z AND TXY G)	
	TAXIWAY Y - CLOSED (BETWEEN RWY 2R/20L AND RWY 2L/20R)	
	TAXIWAY T - CLOSED (BETWEEN RWY 2R/20L AND RWY 2L/20R)	
	ALL OTHER TAXIWAYS OPEN	

FAA CRITICAL POINT TABLE

POINT	LATITUDE	LONGITUDE	GROUND ELEVATION	OBSTRUCTION HEIGHT (FT)	ABOVE GROUND ELEVATION
10	41°53'38.18"	88°15'09.48"	747	25	772
11	41°54'09.20"	88°14'59.12"	751	25	776
12	41°54'23.10"	88°14'54.47"	752	25	777
13	41°54'37.00"	88°14'44.83"	756	25	781
14	41°54'36.58"	88°14'39.50"	757	25	782
15	41°53'57.75"	88°14'45.84"	751	25	776
16	41°53'59.67"	88°14'45.20"	751	25	776
17	41°53'59.43"	88°14'43.91"	751	25	776
18	41°53'57.52"	88°14'44.55"	751	25	776

PHASE 2 NOTES

1. THIS PHASE SHALL INCLUDE ALL WORK EAST OF THE RUNWAY 2L/20R RUNWAY SAFETY AREA.
2. TO FACILITATE SAFE TRAVEL OPERATIONS FOR THE CONTRACTOR'S EQUIPMENT AND VEHICLES, RUNWAY 2R/20L SHALL REMAIN CLOSED DURING THIS PHASE EVEN IF ADDITIVE ALTERNATE NO. 3 IS NOT AWARDED.
3. TO MINIMIZE CLOSURE TIME OF RUNWAY 2R/20L, HIGH EARLY STRENGTH PCC MIX WILL BE USED FOR THE PCC PANEL REPLACEMENTS ON RUNWAY 2R/20L (ADDITIVE ALTERNATE NO. 3).
4. THE CONTRACTOR SHALL BE PERMITTED 4 CALENDAR DAYS TO COMPLETE THE WORK IN THIS PHASE AND RE-OPEN RUNWAY 2R/20L.
5. AFTER THE NEW PCC HAS BEEN POURED FOR THE PANEL REPLACEMENTS UNDER THIS PHASE, THE WORK AREAS SHALL REMAIN CLOSED TO AIRCRAFT TRAFFIC WHILE THE PCC MIX CURES. WHEN PCC STRENGTH TESTING PRODUCES ACCEPTABLE RESULTS, THESE AREAS MAY BE RE-OPENED TO AIRCRAFT TRAFFIC.
6. WHEN THE CONTRACTOR'S EQUIPMENT, VEHICLES OR PERSONNEL NEED TO CROSS ACTIVE PAVEMENTS , THE CONTRACTOR WILL BE REQUIRED TO BE UNDER CONTROL BY A CROSSING GUARD OR ESCORT IN RADIO CONTACT WITH THE ATCT.

CMT

CONSULTANTS

100% FINAL
JANUARY 12, 2024

REHAB AIRFIELD PAVEMENTS
FED

DUPAGE AIRPORT AUTHORITY

OWNER

DUPAGE AIRPORT
WEST CHICAGO, ILLINOIS

MARK	DATE	DESCRIPTION

AIP PROJ. NO.	
DPA 5065	
CMT PROJECT NO:	22004585.00
CAD DWG FILE:	22004585 - DPA - CSPP PLAN - 2.DWG
DESIGNED BY:	AM
DRAWN BY:	JRO
CHECKED BY:	DKP
APPROVED BY:	DLP
COPYRIGHT:	

SHEET TITLE

CONSTRUCTION SAFETY AND PHASING PLAN - 2

Path: K:\DupageAp\22004585-00_RehabAirfieldPavementsFED\Draw\Sheets\22004585 - dpa - cspp plan - 2.dwg
Date: Wednesday, January 31, 2024 2:28:50 PM

LEGEND

- CONTRACTOR'S STAGING AND STORAGE AREA
- PAVEMENT CLOSED TO AIR TRAFFIC
- LOW PROFILE BARRICADES
- CLOSED RUNWAY MARKER
- CLOSED TAXIWAY MARKER
- CONTRACTOR'S ACCESS/HAUL ROUTE
- AIRCRAFT MOVEMENT AREA
- TOFA — TAXIWAY OBJECT FREE AREA (TOFA)
- RSA — RUNWAY SAFETY AREA (RSA)
- ROFA — RUNWAY OBJECT FREE AREA (ROFA)
- 1 — FAA CRITICAL POINT

EXISTING CRITICAL AIRCRAFT AND REQUIRED SAFETY AREAS

RUNWAY	2L/20R	2R/20L	10/28	15/33
APPROACH CATEGORY	D	C	B	B
DESIGN GROUP	III	II	II	II
DESIGN AIRCRAFT	BBJ	CHALLENGER 850	FALCON 900	KING AIR C90-1
WINGSPAN	117.4 FEET	69.6 FEET	63.4 FEET	50.2 FEET
TAIL HEIGHT	41.1 FEET	20.4 FEET	24.8 FEET	14.2 FEET
STRENGTH (MGTW)	171,000 LBS.	53,000 LBS.	45,500 LBS.	9,650 LBS.
LENGTH	BBJ	CHALLENGER 850	FALCON 900	KING AIR C90-1
(1) RUNWAY SAFETY AREA WIDTH (RSA)	500 (250' FROM ℄)	400 (200' FROM ℄)	150 (75' FROM ℄)	150 (75' FROM ℄)
(2) RUNWAY OBJECT FREE AREA WIDTH (ROFA)	800 (400' FROM ℄)	800 (400' FROM ℄)	500 (250' FROM ℄)	500 (250' FROM ℄)
TAXIWAY SAFETY AREA WIDTH (TSA)	118 (59' FROM ℄)	79 (39.5' FROM ℄)	79 (39.5' FROM ℄)	79 (39.5' FROM ℄)
(1)(2) TAXIWAY OBJECT FREE AREA WIDTH (TOFA)	186 (93' FROM ℄)	131 (65.5' FROM ℄)	131 (65.5' FRM ℄)	131 (65.5' FRM ℄)

1. NO CONSTRUCTION WITHIN THESE LIMITS WILL BE ALLOWED WITHOUT THE RUNWAY AND / OR TAXIWAY BEING CLOSED.
2. NO CONSTRUCTION EQUIPMENT SHALL BE PARKED / STORED WITHIN THE OBJECT FREE AREA(S) OF OPEN RUNWAYS AND / OR TAXIWAYS AND THE PARKED / STORED EQUIPMENT HEIGHT SHALL NOT PENETRATE THE PART 77 SURFACE(S).
3. ADDITIVE ALTERNATE WORK ON THE FLIGHT CENTER APRON CAN BE COMPLETED DURING ANY PHASE.

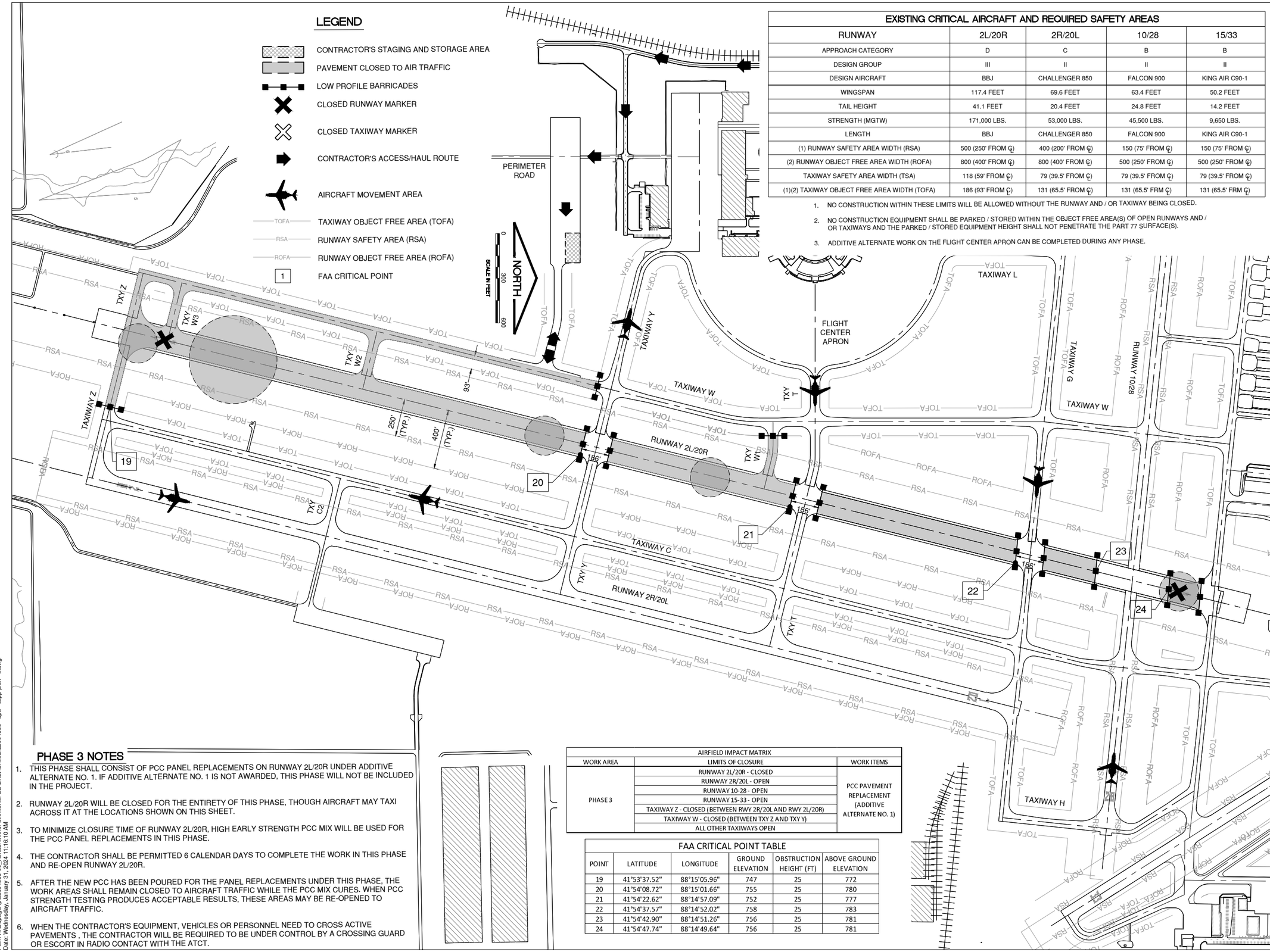

PHASE 3 NOTES

1. THIS PHASE SHALL CONSIST OF PCC PANEL REPLACEMENTS ON RUNWAY 2L/20R UNDER ADDITIVE ALTERNATE NO. 1. IF ADDITIVE ALTERNATE NO. 1 IS NOT AWARDED, THIS PHASE WILL NOT BE INCLUDED IN THE PROJECT.
2. RUNWAY 2L/20R WILL BE CLOSED FOR THE ENTIRETY OF THIS PHASE, THOUGH AIRCRAFT MAY TAXI ACROSS IT AT THE LOCATIONS SHOWN ON THIS SHEET.
3. TO MINIMIZE CLOSURE TIME OF RUNWAY 2L/20R, HIGH EARLY STRENGTH PCC MIX WILL BE USED FOR THE PCC PANEL REPLACEMENTS IN THIS PHASE.
4. THE CONTRACTOR SHALL BE PERMITTED 6 CALENDAR DAYS TO COMPLETE THE WORK IN THIS PHASE AND RE-OPEN RUNWAY 2L/20R.
5. AFTER THE NEW PCC HAS BEEN POURED FOR THE PANEL REPLACEMENTS UNDER THIS PHASE, THE WORK AREAS SHALL REMAIN CLOSED TO AIRCRAFT TRAFFIC WHILE THE PCC MIX CURES. WHEN PCC STRENGTH TESTING PRODUCES ACCEPTABLE RESULTS, THESE AREAS MAY BE RE-OPENED TO AIRCRAFT TRAFFIC.
6. WHEN THE CONTRACTOR'S EQUIPMENT, VEHICLES OR PERSONNEL NEED TO CROSS ACTIVE PAVEMENTS , THE CONTRACTOR WILL BE REQUIRED TO BE UNDER CONTROL BY A CROSSING GUARD OR ESCORT IN RADIO CONTACT WITH THE ATCT.

AIRFIELD IMPACT MATRIX

WORK AREA	LIMITS OF CLOSURE	WORK ITEMS
PHASE 3	RUNWAY 2L/20R - CLOSED	PCC PAVEMENT REPLACEMENT (ADDITIVE ALTERNATE NO. 1)
	RUNWAY 2R/20L - OPEN	
	RUNWAY 10-28 - OPEN	
	RUNWAY 15-33 - OPEN	
	TAXIWAY Z - CLOSED (BETWEEN RWY 2R/20L AND RWY 2L/20R)	
	TAXIWAY W - CLOSED (BETWEEN TXY Z AND TXY Y)	
	ALL OTHER TAXIWAYS OPEN	

FAA CRITICAL POINT TABLE

POINT	LATITUDE	LONGITUDE	GROUND ELEVATION	OBSTRUCTION HEIGHT (FT)	ABOVE GROUND ELEVATION
19	41°53'37.52"	88°15'05.96"	747	25	772
20	41°54'08.72"	88°15'01.66"	755	25	780
21	41°54'22.62"	88°14'57.09"	752	25	777
22	41°54'37.57"	88°14'52.02"	758	25	783
23	41°54'42.90"	88°14'51.26"	756	25	781
24	41°54'47.74"	88°14'49.64"	756	25	781

CMT

CONSULTANTS

100% FINAL
JANUARY 12, 2024

REHAB AIRFIELD PAVEMENTS
FED

DuPage Airport Authority

OWNER

DUPAGE AIRPORT
WEST CHICAGO, ILLINOIS

MARK	DATE	DESCRIPTION

AIP PROJ. NO.	
DPA 5065	
CMT PROJECT NO:	22004585.00
CAD DWG FILE:	22004585 - DPA - CSPP PLAN - 3.DWG
DESIGNED BY:	AM
DRAWN BY:	JRO
CHECKED BY:	DKP
APPROVED BY:	DLP
COPYRIGHT:	

SHEET TITLE

CONSTRUCTION SAFETY AND PHASING PLAN - 3

SHEET 6 OF 20

Path: K:\DupageAp\22004585-00_RehabAirfield\Pavements\FED\Draw\Sheets\22004585 - dpa - cspp plan - 3.dwg
Date: Wednesday, January 31, 2024 11:16:10 AM

GENERAL

1. THE CONTRACTOR AND ALL SUBCONTRACTORS SHALL FOLLOW THE REQUIREMENTS OF THE AIRPORT'S APPROVED CONSTRUCTION SAFETY AND PHASING PLAN (CSPP), FAA AC 150/5370-2G OR LATEST EDITION, AND ALL AIRPORT SAFETY AND SECURITY REQUIREMENTS.

2. PRIOR TO THE NOTICE TO PROCEED, THE CONTRACTOR SHALL SUBMIT TO THE AIRPORT THROUGH THE RESIDENT ENGINEER, FOR APPROVAL A SAFETY PLAN COMPLIANCE DOCUMENT (SPCD) IN ACCORDANCE WITH FAA AC 150/5370-2G OR LATEST EDITION. NO CONSTRUCTION ACTIVITY SHALL BEGIN UNTIL THE AIRPORT HAS APPROVED THE SPCD.

3. THE CSPP COVERS OPERATIONAL SAFETY. THE CONTRACTOR SHALL BE RESPONSIBLE FOR THE INDIVIDUAL SAFETY OF HIS/HER PERSONNEL AND MEETING OSHA REQUIREMENTS.

4. A MINIMUM OF 10 DAYS PRIOR TO THE NOTICE TO PROCEED THE CONTRACTOR SHALL PROVIDE A LIST OF SUBCONTRACTORS AND MATERIAL SUPPLIERS.

5. ALL CONTRACTOR COSTS ASSOCIATED WITH THE REQUIREMENTS LISTED ON THIS SHEET SHALL BE CONSIDERED INCIDENTAL TO THE CONTRACT.

6. THE SUGGESTED SEQUENCE OF CONSTRUCTION SHOWN IS INTENDED TO ALLOW FOR THE ORDERLY CONSTRUCTION OF THE NEW IMPROVEMENTS WHILE MAINTAINING TENANT/AIRCRAFT ACCESS AT ALL TIMES. THE PHASING SHOWN IS A SUGGESTED SEQUENCE OF CONSTRUCTION ONLY. THIS SEQUENCE MAY BE MODIFIED WITH THE APPROVAL OF THE ENGINEER IN CONSULTATION WITH THE AIRPORT DIRECTOR OF OPERATIONS. HOWEVER, ALTERNATE STAGING PLANS MUST MAINTAIN AIRPORT OPERATIONS TO THE SATISFACTION OF THE AIRPORT DIRECTOR OF OPERATIONS.

7. DUE TO SEVERAL CONFLICTING EVENTS SCHEDULED FOR LATE JULY/EARLY AUGUST ON THE AIRFIELD, THE AIRPORT REQUESTS THAT CONSTRUCTION BEGIN IN LATE AUGUST OR LATER.

1. COORDINATION

1. PRIOR TO THE START OF CONSTRUCTION THE CONTRACTOR SHALL ATTEND A PRE-CONSTRUCTION CONFERENCE WITH THE AIRPORT, RESIDENT ENGINEER, AND ILLINOIS DIVISION OF AERONAUTICS (IDA). THE COST OF PREPARING FOR AND ATTENDING THE PRE-CONSTRUCTION CONFERENCE SHALL BE INCIDENTAL TO THE CONTRACT.

2. PRIOR TO THE START OF CONSTRUCTION, THE CONTRACTOR SHALL SUBMIT A PROGRESS SCHEDULE TO BE APPROVED BY THE ENGINEER. THIS SCHEDULE SHALL SHOW START/ STOP DATES OF ALL PHASES. THE APPROVED PROGRESS SCHEDULE SHALL BE DISTRIBUTED TO ALL PARTIES 10 WORKING DAYS PRIOR TO START OF CONSTRUCTION. THE CONTRACTOR MAY BE REQUIRED TO SUBMIT A REVISED PROGRESS SCHEDULE TO ACCOMMODATE AIRPORT EVENTS OR CONTRACTOR'S LACK OF PROGRESS. SHOULD A REVISED SCHEDULE BE REQUIRED, THE REVISION SHALL BE COMPLETED AT NO ADDITIONAL COST TO THE CONTRACT.

3. DURING CONSTRUCTION THE CONTRACTOR SHALL ATTEND A WEEKLY COORDINATION MEETING WITH AIRPORT STAFF, FAA, RESIDENT ENGINEER AND OTHER APPROPRIATE STAKE HOLDERS TO DISCUSS PROJECT PROGRESS. AT A MINIMUM, PROJECT SCHEDULE AND GATE VISITOR LOGS SHALL BE DISCUSSED. REPRESENTATION BY THE PRIME CONTRACTOR IS MANDATORY. ALL COSTS ASSOCIATED WITH ATTENDING THE WEEKLY MEETING SHALL BE INCIDENTAL TO THE CONTRACT.

2. PHASING

1. TOTAL CONTRACT TIME SHALL BE 28 CALENDAR DAYS. SHOULD ALL THREE ADDITIVE ALTERNATES BE AWARDED, THE CONTRACT TIME SHALL BE 40 CALENDAR DAYS.

2. PHASING SHALL BE AS NOTED BELOW AND AS SHOWN ON THE CONSTRUCTION SAFETY AND PHASING PLANS.

3. TO CLOSE A RUNWAY OR TAXIWAY, THE CONTRACTOR SHALL PLACE RUNWAY AND TAXIWAY CLOSURE MARKERS AND BARRICADES AT THE LOCATIONS SPECIFIED. TO RE-OPEN THE RUNWAY OR TAXIWAY, THE CONTRACTOR SHALL CLEAN ANY DEBRIS OFF OF THE PAVEMENT AND REMOVE THE RUNWAY/TAXIWAY CLOSURE MARKERS. ALL WORK ASSOCIATED WITH CLOSING AND OPENING AIRFIELD PAVEMENTS SHALL BE CONSIDERED INCIDENTAL TO THE CONTRACT.

4. CONTRACTOR SHALL COVER ALL AIRFIELD SIGNS AND LIGHTS ON CLOSED TAXIWAYS UNTIL THE TAXIWAY IS REOPENED FOR AIRCRAFT USE. THE METHOD AND MATERIALS USED TO COVER THE SIGNS AND LIGHTS SHALL MEET THE ENGINEER'S AND AIRPORT'S APPROVAL.

5. SEE CONTRACTOR ACCESS NOTES ON THIS SHEET FOR SITE ACCESS AND HAULING GUIDELINES.

6. PRIOR TO REOPENING A CLOSED RUNWAY OR TAXIWAY, THE ENTIRE RUNWAY SAFETY AREA (RSA), MEASURED 250 FEET FROM THE RUNWAY CENTERLINE, INCLUDING BEYOND THE RUNWAY END WITHIN THE EXTENDED RSA, AND THE ENTIRE TAXIWAY OBJECT FREE AREA (TOFA), MEASURED 85.5 FEET FROM GROUP III TAXIWAYS (I.E. TAXIWAY C AND G) MUST MEET FAA CRITERIA. FAA CRITERIA REQUIRES THAT THERE BE NO OPEN EXCAVATIONS OR TRENCHES IN THESE AREAS. THE MAXIMUM PAVEMENT DROP OFF SHALL BE 3 INCHES, AND ALL GRADES IN ANY DIRECTION BE LESS THAN 3 PERCENT. STEEL PLATES OR TEMPORARY WEDGING OF BASE COURSE MAY BE REQUIRED TO MEET CRITERIA. ALL NECESSARY TEMPORARY MEASURES SHALL BE CONSIDERED INCIDENTAL TO THE CONTRACT.

7. NO MATERIAL OR EQUIPMENT SHALL BE STOCKPILED WITHIN AN RSA, ROFA OR OBSTACLE FREE ZONE (OFZ) OF AN ACTIVE RUNWAY, OR WITHIN THE TOFA OF AN ACTIVE TAXIWAY.

8. WORK AREAS AND DESCRIPTIONS

MOBILIZATION

SUBSTANTIALLY COMPLETE MOBILIZATION DURING THE MOBILIZATION TIME PERIOD.

PHASE 1 AREA

THIS WORK GENERALLY INCLUDES, BUT IS NOT LIMITED TO, REMOVAL AND REPLACEMENT OF CONCRETE PAVEMENT, ASPHALT TREATED PERMEABLE BASE COURSE, AGGREGATE BASE COURSE, PCC DIAMOND GRINDING MILLING, PAVEMENT MARKING WITHIN THE TOFA OF TAXIWAY W BETWEEN TAXIWAY W1 AND W2, TAXIWAY G BETWEEN TAXIWAY F AND W, AND TAXIWAY L.

PHASE 2 AREA

THIS WORK GENERALLY INCLUDES, BUT IS NOT LIMITED TO, REMOVAL AND REPLACEMENT OF CONCRETE PAVEMENT, ASPHALT TREATED PERMEABLE BASE COURSE, BITUMINOUS PAVEMENT MILL AND OVERLAY, PCC DIAMOND GRINDING, AND PAVEMENT MARKING WITHIN THE ROFA OF RUNWAY 2R/20L AND THE TOFA OF TAXIWAY C BETWEEN TAXIWAY Z AND TAXIWAY G.

PHASE 3 AREA

THIS WORK GENERALLY INCLUDES, BUT IS NOT LIMITED TO, REMOVAL AND REPLACEMENT OF CONCRETE PAVEMENT, ASPHALT TREATED PERMEABLE BASE COURSE AND PAVEMENT MARKING WITHIN THE ROFA OF RUNWAY 2L/20R.

9.WORK AREA RESTRICTIONS

GENERAL (ALL WORK AREAS)

ALL WORK ON THE AIRFIELD ARE LOCATED INSIDE THE AOA SECURITY FENCE, AND ARE SUBJECT TO THE LIMITATIONS DESCRIBED IN SPECIFICATIONS, PART 1 - GENERAL PROVISIONS.

WORK CONDUCTED UTILIZING EXTENDED AIRFIELD PAVEMENT CLOSURES AS INDICATED IN THE PLANS WILL ALLOW THE CONTRACTOR TO CONDUCT WORK 24 HOURS A DAY, 7 DAYS A WEEK. THE CLOSURE WILL ALLOW THE CONTRACTOR TO COMPLETE ALL WORK INSIDE THE RESPECTIVE RSA/TOFA, AND TO A DISTANCE OUTSIDE THESE AREAS AS TO NOT TO RE-ENCROACH THE RSA/TOFA WITH MANPOWER OR EQUIPMENT ONCE THE CLOSURE PERIOD IS CONCLUDED.

SIMULTANEOUS CLOSURES OF AIRFIELD PAVEMENTS TO COMPLETE WORK IN MORE THAN ONE WORK AREA AT A TIME WILL NOT BE ALLOWED UNLESS SPECIFICALLY STATED. ALL WORK WITHIN A WORK AREA MUST BE SUBSTANTIALLY COMPLETED AND ACCEPTED PRIOR TO CLOSING ANY OTHER AIRFIELD PAVEMENT FOR WORK IN REMAINING ASSOCIATED WORK AREAS.

CONTRACTOR SHALL NOTIFY THE AIRPORT 10 CALENDAR DAYS PRIOR TO BEGINNING CONSTRUCTION IN ANY WORK AREA AND TO REQUEST A RUNWAY OR TAXIWAY CLOSURE.

TOTAL COMBINED WORK FOR ALL WORK AREAS MUST OCCUR WITHIN THE TOTAL AMOUNT OF CALENDAR DAYS ALLOWED FOR THE ENTIRE PROJECT. HOWEVER, EXPEDITED CLOSURE PERIODS FOR CERTAIN WORK AREAS ARE NOTED BELOW.

PHASE 1 AREA

THIS PHASE WILL REQUIRE CLOSURES ON TAXIWAY W BETWEEN TAXIWAY W1 AND TAXIWAY W2, TAXIWAY Y BETWEEN RUNWAY 2L/20R AND THE FLIGHT CENTER APRON, TAXIWAY G BETWEEN TAXIWAY W AND RUNWAY 2L/20R, AND TAXIWAY L TO ITS EXTENTS.

TAXIWAY Y AND TAXIWAY L MAY NOT BE CLOSED AT THE SAME TIME.

RUNWAY 2R/20L, RUNWAY 2L/20R, RUNWAY 10-28, AND RUNWAY 15-33 SHALL REMAIN OPEN FOR THE DURATION OF PHASE 1. ALL OTHER TAXIWAYS SHALL REMAIN OPEN.

PHASE 2 AREA

AN EXTENDED CLOSURE OF RUNWAY 2R/20L IS REQUIRED TO COMPLETE WORK WITHIN THE ROFA OF RUNWAY 2R/20L, IN ADDITION TO CLOSURES ON TAXIWAY C BETWEEN TAXIWAY Z AND TAXIWAY G, AND TAXIWAYS T,Y, AND Z BETWEEN RUNWAY 2R/20L AND 2L/20R IN ORDER TO COMPLETE WORK WITHIN THE TOFA.

THE CLOSURE OF RUNWAY 2R/20L SHALL BE LIMITED TO A 4-CALENDAR DAY DURATION BEFORE RE-OPENING TO AIRCRAFT OPERATION AND MUST OCCUR WITHIN THE CONTRACT TIME ALLOWED FOR THE ENTIRE PROJECT.

RUNWAY 2L/20R, RUNWAY 10-28, AND RUNWAY 15-33 SHALL REMAIN OPEN FOR THE DURATION OF PHASE 2. ALL OTHER TAXIWAYS SHALL REMAIN OPEN.

PHASE 3 AREA

AN EXTENDED CLOSURE OF RUNWAY 2L/20R IS REQUIRED TO COMPLETE THE WORK WITHIN THE ROFA OF RUNWAY 2L/20R, IN ADDITION TO CLOSURES ON TAXIWAY W BETWEEN TAXIWAY Z AND TAXIWAY Y. CLOSURES OF PAVEMENT FOR PHASE 3 SHALL BE LIMITED TO A 6-CALENDAR DAY DURATION BEFORE RE-OPENING TO AIRCRAFT OPERATION AND MUST OCCUR WITHIN THE CONTRACT TIME ALLOWED FOR THE ENTIRE PROJECT.

RUNWAY 2R/20L, RUNWAY 10-28, AND RUNWAY 15-33 SHALL REMAIN OPEN FOR THE DURATION OF PHASE 1. ALL OTHER TAXIWAYS SHALL REMAIN OPEN.

3. AREAS AND OPERATIONS AFFECTED BY THE CONSTRUCTION ACTIVITY

1. ALL RUNWAYS, TAXIWAYS AND APRONS SHALL BE KEPT OPEN TO AIRCRAFT TRAFFIC DURING CONSTRUCTION EXCEPT AS NOTED ON THE PHASING PLAN.

2. THE ENGINEER AND AIRPORT DIRECTOR OF OPERATIONS OR HIS DESIGNATED REPRESENTATIVE SHALL HAVE FINAL SAY IN THE APPROVAL OF THE CONSTRUCTION OPERATING SEQUENCE AS IT RELATES TO PEDESTRIAN, VEHICULAR AND AIRCRAFT OPERATIONS. AIRCRAFT OPERATIONS HAVE THE RIGHT-OF-WAY ON THE AIRFIELD. VEHICULAR TRAFFIC AND CONTRACTOR ACTIVITIES SHALL YIELD TO AIRCRAFT OPERATIONS. SHOULD IT BE NECESSARY FOR THE CONTRACTOR TO TEMPORARILY RELOCATE EQUIPMENT AT ANY TIME TO ALLOW AN AIRCRAFT TO PASS, THE CONTRACTOR SHALL DO SO IMMEDIATELY AT NO EXTRA COST TO THE OWNER.

4. NAVAIDS THAT COULD BE AFFECTED

1. THE CONTRACTOR MUST COORDINATE WITH AIRPORT OPERATIONS/ENGINEER AND FAA **A MINIMUM OF 30 DAYS** IN ADVANCE FOR ANY WORK WITHIN A NAVAID CRITICAL AREA OR AFFECTING THE VISUAL, TRANSMITTED SIGNAL OR POWER SUPPLY OF A NAVAID. RUNWAY 20R FEATURES A FAA OWNED SET OF PAPI LIGHTS. IF ADDITIVE ALTERNATE NO. 1 IS AWARDED, THE CONTRACTOR MUST COORDINATE WITH THE FAA BEFORE THE RUNWAY CAN BE CLOSED FOR PHASE 3 OF THE PROJECT.

2. EDGE LIGHTS, THRESHOLD LIGHTS, VISUAL AIDS AND ALL ILS EQUIPMENT SHALL BE SHUT OFF FOR THE DURATION OF A CLOSURE PERIOD ON ANY ASSOCIATED PAVEMENTS. IF THE LIGHTING CIRCUIT MUST BE ON FOR OPEN PAVEMENT AREAS, CLOSED PAVEMENT AREA LIGHTS SHALL BE COVERED COMPLETELY.

3. EXCEPT WHERE NOTED IN THE PLANS, EXISTING COMMUNICATIONS EQUIPMENT AND NAVIGATIONAL AIDS (NAVAIDS) SHALL NOT BE DISTURBED BY THE CONTRACTOR AND SHALL BE PROTECTED FROM DAMAGE.

4. PRIOR TO BEGINNING SITE WORK, CONTRACTOR SHALL COORDINATE THROUGH AIRPORT OPERATIONS TO LOCATE, AND THE CONTRACTOR TO MARK ALL UNDERGROUND COMMUNICATIONS CABLES AND FACILITIES, WITHIN THE PROJECT AREA.

5. IF CONTRACTOR CAUSES INTERRUPTION OF POWER OR COMMUNICATIONS TO A NAVAID CONTRACTOR SHALL REPAIR WITHIN 24 HOURS AT THE CONTRACTOR'S COST. CONTRACTOR MUST COORDINATE REPAIR WITH AIRPORT OPERATIONS BEFORE ANY REPAIR IS MADE.

6. THE CONTRACTOR SHALL BE REQUIRED TO ESTABLISH A COORDINATION PLAN WITH THE AIRPORT DIRECTOR OF OPERATIONS OR HIS DESIGNATED REPRESENTATIVE, REGARDING DE-ENERGIZING AND ENERGIZING OF THE AIRFIELD LIGHTING CIRCUITS AT THE START AND END OF EACH CONSTRUCTION DAY. THE CONTRACTOR SHALL BE RESPONSIBLE FOR LOCATING ALL AIRPORT OWNED UTILITIES AND SHALL BE DONE SO AT NO EXTRA COST TO THE CONTRACT.

7. ALL EXISTING TAXIWAY AND RUNWAY AIRFIELD LIGHTING CIRCUITS, FAA CABLES AND OTHER AIRPORT ELECTRICAL CABLES SHALL REMAIN IN SERVICE UNTIL REPLACED AS ACCEPTABLE TO THE RESIDENT ENGINEER AND AIRPORT FOR ALL PHASES. ALL TEMPORARY CABLING AND SPLICING NECESSARY TO KEEP THE CIRCUITS IN OPERATION SHALL BE CONSIDERED INCIDENTAL TO THE CONTRACT.

8. DURING CONSTRUCTION, CONTINUOUS ALL WEATHER ACCESS TO EXISTING NAVAIDS IN THE PROJECT AREA MUST BE MAINTAINED AT NO COST TO THE CONTRACT.

CMT

CONSULTANTS

100% FINAL
JANUARY 12, 2024

REHAB AIRFIELD PAVEMENTS
FED

DuPage Airport Authority

OWNER

DUPAGE AIRPORT
WEST CHICAGO, ILLINOIS

MARK	DATE	DESCRIPTION

AIP PROJ. NO.	
DPA 5065	
CMT PROJECT NO:	22004585.00
CAD DWG FILE:	22004585 - DPA - CSPP NOTES.DWG
DESIGNED BY:	AM
DRAWN BY:	JRO
CHECKED BY:	DKP
APPROVED BY:	DLP
COPYRIGHT:	

SHEET TITLE

CONSTRUCTION SAFETY AND PHASING PLAN GENERAL NOTES - 1

Path: K:\Dupage\Ap\22004585-00_RehabAirfieldPavementsFED\Draw\Sheets\22004585 - dpa - cspp notes.dwg
Date: Wednesday, January 31, 2024 2:34:36 PM

5. CONTRACTOR ACCESS

1. THE CONTRACTOR ACCESS ROAD AND STAGING AREAS SHALL BE AS SHOWN ON THE REFERENCED PLAN. THE CONTRACTOR SHALL MAINTAIN AND REPAIR THE CONSTRUCTION ACCESS ROAD AND STAGING AREA IN ITS ORIGINAL CONDITION AT NO ADDITIONAL COST TO THE CONTRACT. ALTERNATE STAGING AREAS AND ACCESS FOR THIS AREA WILL NOT BE ALLOWED.

2. THE ENTRANCE SHALL BE SIGNED ACCORDINGLY AS TO ALLOW ONLY CONSTRUCTION VEHICLE ACCESS AND WILL ONLY BE ACCESSIBLE DURING THE CONTRACTOR'S SCHEDULED WORK DAY. ALL SIGNAGE SHALL CONFORM TO THE CITY OF WEST CHICAGO AND IDOT CONSTRUCTION STANDARDS FOR VEHICLES ENTERING AND LEAVING THE SITE.

3. NOT USED.

4. CONTRACTOR SHALL OBTAIN ALL NECESSARY PERMITS AND TEMPORARY EASEMENTS FOR THE PUBLIC ACCESS ROAD(S) SHOWN AND SHALL COMPLY WITH ALL REQUIREMENTS, LOAD RESTRICTIONS, & TRAFFIC CONTROL SIGNAGE REQUIRED BY THE CITY, COUNTY, TOWNSHIP, OR I.D.O.T.

5. THE CONTRACTOR WILL BE REQUIRED TO PUT AIRPORT FLAGS AND HAVE BEACON (FLASHING YELLOW) LIGHTS ON ALL EQUIPMENT AT ALL TIMES DURING CONSTRUCTION.

6. NOT USED.

7. NOT USED.

8. THE CONTRACTOR'S MATERIAL AND EQUIPMENT, WHEN NOT IN USE, SHALL BE STORED IN THE CONTRACTOR'S STAGING AREA. ALL DELIVERIES, EQUIPMENT REFUELING, EQUIPMENT MAINTENANCE AND EQUIPMENT TRANSFERS SHALL TAKE PLACE WITHIN THE CONTRACTOR'S STAGING AREA.

9. DURING ADVERSE WEATHER THE CONTRACTOR SHALL MAINTAIN ACCESS TO THE WORK AT NO ADDITIONAL COST TO THE CONTRACT. NO EXTENSION OF THE CONTRACT TIME WILL BE CONSIDERED FOR DELAYS DUE TO LACK OF ADEQUATE ACCESS TO THE WORK SITE.

10. THE CONTRACTOR WILL BE PERMITTED TO STORE EQUIPMENT AND MATERIALS ONLY AT THE LOCATIONS SHOWN. PARKED EQUIPMENT AND MATERIAL STOCKPILES SHALL NOT PENETRATE SURFACES DEFINED BY F.A.R. TITLE 14 PART 77 - OBJECTS AFFECTING NAVIGABLE AIRSPACE. EXISTING TURF AREAS DISTURBED BY THE CONTRACTOR'S OPERATIONS SHALL BE RESTORED BY HIM/HER AT HIS/HER EXPENSE TO THE SATISFACTION OF THE RESIDENT ENGINEER AND THE AIRPORT.

11. ALL CONSTRUCTION TRAFFIC OPERATING ON, OR CROSSING RUNWAYS, TAXIWAYS AND APRONS OPEN TO AIRCRAFT TRAFFIC SHALL BE UNDER CONTROL BY A FLAGMAN OR ESCORT IN RADIO CONTACT WITH THE CONTROL TOWER. THE CONTRACTOR SHALL PROVIDE HIS OWN FLAGMEN.

12. IF NECESSARY, THE CONTRACTOR SHALL CONSTRUCT A HAUL ROUTE TO THE STAGING AREA WITHIN THE PROJECT LIMITS. HAUL ROUTE(S) SHALL BE INCIDENTAL TO THE COST OF MAINTENANCE OF TRAFFIC. ALL HAUL ROUTE(S) INCLUDING EXISTING PAVEMENTS, DRIVES OR ANY OTHER AREAS USED BY THE CONTRACTOR SHALL BE RESTORED IN KIND TO THEIR PRE-CONSTRUCTION CONDITION OR TO THE SATISFACTION OF THE ENGINEER AND AIRPORT DIRECTOR OF OPERATIONS. THE COST OF MAINTAINING, REPAIRING SEEDING /MULCHING OR CONSTRUCTING THESE HAUL ROUTE(S) SHALL BE INCIDENTAL TO THE COST OF THE CONTRACT.

13. ALL EXISTING PAVEMENTS, DRIVES OR ANY OTHER AREAS USED AS A STAGING AREA BY THE CONTRACTOR SHALL BE RESTORED IN KIND TO THEIR PRE-CONSTRUCTION CONDITION OR TO THE SATISFACTION OF THE ENGINEER AND AIRPORT OPERATION MANAGER. THE COST OF MAINTAINING, REPAIRING SEEDING /MULCHING OR CONSTRUCTING THESE PAVEMENTS / AREAS SHALL BE INCIDENTAL TO THE CONTRACT.

14. ALL VEHICLE AND EQUIPMENT OPERATORS USED BY THE CONTRACTOR SHALL BE PROPERLY TRAINED BY THE CONTRACTOR.

15. THE CONTRACTOR SHALL NOTIFY THE AIRPORT IF CONSTRUCTION ACTIVITY WILL REQUIRE THE BLOCKAGE OF EMERGENCY ACCESS TO THE AIRPORT.

16. THE CONTRACTOR SHALL BE REQUIRED TO PROVIDE DUST CONTROL AT ALL TIMES DURING THE PROJECT DURATION. A WATER TRUCK SHALL BE REQUIRED TO BE ON SITE DURING ALL CONSTRUCTION OPERATION WORKING HOURS. PAYMENT FOR DUST CONTROL SHALL BE INCIDENTAL TO THE CONTRACT.

6. WILDLIFE MANAGEMENT

1. THE CONTRACTOR SHALL NOTIFY THE AIRPORT OR THE RESIDENT ENGINEER IF ANY WILDLIFE IS SEEN ENTERING THE AIRPORT.

2. CONTRACTOR ACCESS GATES SHALL REMAIN CLOSED WHEN THE CONTRACTOR IS NOT WORKING.

3. THE CONTRACTOR SHALL DISPOSE OF ALL TRASH INCLUDING FOOD SCRAPS IN APPROVED CONTRACTOR PROVIDED CONTAINERS.

7. FOREIGN OBJECT DEBRIS (FOD) MANAGEMENT

1. THE CONTRACTOR SHALL PICK UP ANY FOREIGN OBJECT DEBRIS (FOD) SEEN ON THE AIRFIELD PAVEMENTS.

2. THE CONTRACTOR SHALL SECURE ALL LOOSE ITEMS FROM VEHICLES PRIOR TO DRIVING ON AIRFIELD PAVEMENTS.

3. THE CONTRACTOR SHALL KEEP ALL TRUCKS, EQUIPMENT AND MATERIALS OFF OF THE EXISTING PAVEMENT OUTSIDE OF THE PROJECT LIMITS EXCEPT AS SHOWN OR WITH THE PRIOR PERMISSION OF THE ENGINEER. SHOULD THE CONTRACTOR TRACK ANY DEBRIS ONTO EXISTING PAVEMENTS, THIS DEBRIS SHALL BE REMOVED IMMEDIATELY WITH A PICK UP SWEEPER. A PICK UP SWEEPER SHALL BE REQUIRED TO BE ON SITE AND OPERATE DURING ALL CONSTRUCTION OPERATION WORKING HOURS, UNLESS WAIVED BY THE DEPUTY DIRECTOR OF OPERATIONS. THE CONTRACTOR SHALL PROVIDE WASTE RECEPTACLES THROUGHOUT THE WORK ZONE AND MAINTAIN SANITARY FACILITIES FOR EMPLOYEES TO USE. FACILITIES WITHIN THE HANGARS/AIRPORT BUILDINGS SHALL NOT BE USED.

8. HAZARDOUS MATERIALS (HAZMAT) MANAGEMENT

1. THE CONTRACTOR SHALL DEVELOP A HAZMAT MANAGEMENT PLAN AND KEEP COPIES ON THE JOBSITE OF MATERIAL SAFETY DATA SHEETS (MSDS) FOR ALL MATERIALS HANDLED ON THE JOBSITE.

9. NOTIFICATION OF CONSTRUCTION ACTIVITIES

1. THE CONTRACTOR SHALL PROVIDE A 24 HOUR EMERGENCY CONTACT PERSON AND PHONE NUMBER. PERSONNEL SHALL BE ON CALL 24 HOURS PER DAY FOR MAINTAINING AIRPORT HAZARD LIGHTING AND BARRICADES.

2. THE CONTRACTOR SHALL GIVE A MINIMUM OF 10 DAYS NOTICE TO THE FAA AND AIRPORT PRIOR TO THE CLOSURE OF ANY RUNWAY SO THAT THE FAA MAY DEACTIVATE THE FAA - OWNED NAVAIDS.

3. THE CONTRACTOR SHALL GIVE A MINIMUM 30 DAYS NOTICE TO THE AIRPORT, AND PRIOR TO THE PRE-CONSTRUCTION CONFERENCE, PRIOR TO CLOSING ANY RUNWAY OR TAXIWAY PAVEMENT SO THAT THE PROPER NOTAMS MAY BE ISSUED BY THE AIRPORT FOR COORDINATION WITH THE AIRPORT TENANTS.

4. FOR ANY EQUIPMENT USED BY THE CONTRACTOR WITH A HEIGHT GREATER THAN 25', THE CONTRACTOR SHALL PROVIDE TO THE AIRPORT THE TYPE OF EQUIPMENT, TOTAL HEIGHT, AND LOCATION WHERE THE EQUIPMENT WILL BE USED. THE AIRPORT WILL SUBMIT FAA FORM 7460-1 TO THE FAA FOR AN AIRSPACE STUDY. NO EQUIPMENT WITH A HEIGHT GREATER THAN 25' SHALL BE USED UNTIL A DETERMINATION FROM FAA IS RECEIVED.

5. IN THE EVENT OF AN EMERGENCY, THE CONTRACTOR SHALL NOTIFY THE AIRPORT DIRECTOR OF OPERATIONS AND THE RESIDENT ENGINEER.

10. INSPECTION REQUIREMENTS

1. THE CONTRACTOR SHALL INSPECT THE JOBISTE DAILY TO ENSURE COMPLIANCE WITH THE CSPP. THE CHECKLIST FOUND IN APPENDIX 3 OF FAA AC 150/5370-2G OR LATEST EDITION MAY BE USED TO AID IN THE INSPECTIONS.

2. THE CONTRACTOR SHALL REQUEST OPERATIONAL INSPECTION OF EACH PHASE WORK AREA PRIOR THE AREA BEING REOPENED. THE AIRPORT WILL DETERMINE IF THE WORK AREA IS ALLOWED TO BE OPENED.

11. UNDERGROUND UTILITIES

1. COORDINATION BY THE CONTRACTOR WITH THE EXISTING UTILITIES SHALL BE COMPLETED BEFORE CONSTRUCTION IS STARTED. SEE SPECIAL PROVISIONS FOR SPECIFIC REQUIREMENTS. THE LOCATION OF UNDERGROUND UTILITIES AS INDICATED ON THE PLANS HAS BEEN OBTAINED FROM EXISTING RECORDS. NEITHER THE OWNER NOR THE ENGINEER ASSUMES ANY RESPONSIBILITY WHAT SO EVER IN RESPECT TO THE ACCURACY, COMPLETENESS, OR SUFFICIENCY OF THE INFORMATION. THERE IS NO GUARANTEE, EITHER EXPRESSED OR IMPLIED, THAT THE LOCATIONS, SIZE AND TYPE OF MATERIAL OF EXISTING UNDERGROUND UTILITIES AS INDICATED ARE REPRESENTATIVE OF THOSE TO BE ENCOUNTERED DURING CONSTRUCTION. THERE IS NO GUARANTEE, EITHER EXPRESSED OR IMPLIED, THAT THE LOCATIONS, SIZE AND TYPE OF MATERIAL OF EXISTING UNDERGROUND UTILITIES AS INDICATED ARE REPRESENTATIVE OF THOSE TO BE ENCOUNTERED DURING CONSTRUCTION. IT SHALL BE THE CONTRACTOR'S RESPONSIBILITY TO DETERMINE THE ACTUAL LOCATION OF ALL SUCH FACILITIES, INCLUDING SERVICE CONNECTIONS TO UNDERGROUND UTILITIES. PRIOR TO CONSTRUCTION, THE CONTRACTOR SHALL NOTIFY THE UTILITY COMPANY/OWNER OF HIS OPERATIONAL PLANS. THE CONTRACTOR SHALL MAKE ARRANGEMENTS FOR DETAILED INFORMATION AND ASSISTANCE IN LOCATING UTILITIES. IN THE EVENT AN UNEXPECTED UTILITY INTERFERENCE IS ENCOUNTERED DURING CONSTRUCTION, THE CONTRACTOR SHALL IMMEDIATELY NOTIFY THE UTILITY COMPANY, THE OWNER AND THE ENGINEER. ANY SUCH MAINS AND/OR SERVICES DISTURBED BY THE CONTRACTOR'S OPERATIONS SHALL BE RESTORED IMMEDIATELY AT HIS EXPENSE TO THE SATISFACTION OF THE OWNER AND THE ENGINEER.

2. SHOULD A UTILITY COMPANY OR GOVERNMENT AGENCY BE UNABLE TO LOCATE FACILITIES, THE CONTRACTOR SHALL LOCATE THESE FACILITIES. PAYMENT FOR THIS LOCATION SHALL BE INCIDENTAL TO THE IMPROVEMENTS REQUIRING THE LOCATIONS.

3. NOT USED.

4. IT SHALL BE THE CONTRACTOR'S RESPONSIBILITY TO DETERMINE THE ACTUAL LOCATION OF ALL SUCH FACILITIES, INCLUDING SERVICE CONNECTIONS TO UNDERGROUND UTILITIES. PRIOR TO CONSTRUCTION, THE CONTRACTOR SHALL NOTIFY THE UTILITY COMPANY/OWNER OF HIS OPERATIONAL PLANS. THE CONTRACTOR SHALL MAKE ARRANGEMENTS FOR DETAILED INFORMATION AND ASSISTANCE IN LOCATING UTILITIES. IN THE EVENT AN UNEXPECTED UTILITY INTERFERENCE IS ENCOUNTERED DURING CONSTRUCTION, THE CONTRACTOR SHALL IMMEDIATELY NOTIFY THE UTILITY COMPANY, THE OWNER AND THE ENGINEER. ANY SUCH MAINS AND/OR SERVICES DISTURBED BY THE CONTRACTOR'S OPERATIONS SHALL BE RESTORED IMMEDIATELY AT HIS EXPENSE TO THE SATISFACTION OF THE OWNER AND THE ENGINEER.

12. PENALTIES

1. NONCOMPLIANCE BY THE CONTRACTOR WITH AIRPORT RULES AND REGULATIONS OR FAILURE TO COMPLY WITH THE AIRPORT'S APPROVED CSPP AND THE CONTRACTOR'S APPROVED SPCD MAY RESULT IN FINES AS ALLOWED BY LAW.

2. BECAUSE OF THE CRITICAL LIMITATIONS WHICH THE CLOSURE OF A RUNWAY PLACES ON THE USERS OF THE AIRPORT, LIQUIDATED DAMAGES IN THE AMOUNT OF **$2,500** MAY BE DEDUCTED FROM THE MONIES OWED THE CONTRACTOR. FOR EACH HALF HOUR PAST 6:00 A.M. OVER THE CLOSURE PERIODS FOR THE PHASE 3 UNTIL THE SPECIFIED WORK IS COMPLETED AND THE ASSOCIATED RUNWAY IS OPENED TO AIRCRAFT OPERATIONS. DAMAGES MAY BE ASSESSED STARTING IMMEDIATELY AFTER EACH OF THE CLOSURE PERIODS WHEN EITHER RUNWAY IS NOT OPENED. THESE ASSESSED DAMAGES ARE IN ADDITION TO THE DEDUCTIONS FOR EACH DAY OF OVERRUN IN TOTAL CONTRACT TIME AS DEFINED IN SECTION 80, PROSECUTION AND PROGRESS, OF THE CONTRACT DOCUMENTS. SEE CONSTRUCTION ACTIVITY PLAN NOTES AND DETAILS FOR MORE INFORMATION ON RUNWAY AND TAXIWAY CLOSURES.

3. THE CONTRACTOR SHALL RESTRICT ALL CONSTRUCTION ACTIVITIES TO THE CONSTRUCTION AREA DETAILED IN THE CONSTRUCTION SAFETY AND PHASING PLAN. ANY UNAUTHORIZED MOVEMENTS, PEDESTRIAN OR VEHICULAR, BEYOND THE CONSTRUCTION LIMITS SHOWN SHALL BE CONSIDERED AND AIRFIELD INCURSION. AIRFIELD INCURSIONS, AT THE DISCRETION OF THE AIRPORT DIRECTOR OF AVIATION, MAY BE FINED UP TO $1,000 PER INCIDENT. INCURSION FINES WILL BE ASSESSED IMMEDIATELY AND TAKEN FROM MONIES DUE THE CONTRACTOR ON THE NEXT CONSTRUCTION PAYMENT.

13. SPECIAL CONDITIONS

1. ADJACENT CONSTRUCTION MAY IMPACT THE OPERATIONS OF THE CONTRACTOR. SEE THE COORDINATION NOTES FOR ADDITIONAL INFORMATION.

14. RUNWAY AND TAXIWAY VISUAL AIDS

1. ALL RUNWAYS, TAXIWAYS, AND APRONS SHALL BE KEPT OPEN TO AIRPORT TRAFFIC DURING CONSTRUCTION EXCEPT AS NOTED IN THE CONSTRUCTION SAFETY AND PHASING PLAN.

2. IF ANY RUNWAY OR TAXIWAY CLOSURES ARE REQUESTED BY THE CONTRACTOR AND APPROVED BY THE AIRPORT, THE CONTRACTOR SHALL USE MARKING, LIGHTING AND SIGNS THAT FOLLOWING THE REQUIREMENTS OF FAA AC 150/5370-2G OR LATEST EDITION.

15. MARKING AND SIGNS FOR ACCESS ROUTES

1. BARRICADES AND SIGNS SHALL BE USED ALONG THE CONTRACTOR'S ACCESS ROUTE AS DETAILED ON THE CONSTRUCTION SAFETY AND PHASING PLAN.

16. HAZARD MARKING AND LIGHTING

1. THE CONTRACTOR SHALL FURNISH, ERECT, AND MAINTAIN MARKINGS AND ASSOCIATED LIGHTING OF OPEN TRENCHES, EXCAVATIONS, TEMPORARY STOCKPILES, AND HIS/HER CONSTRUCTION EQUIPMENT.

2. ALL CONSTRUCTION EQUIPMENT SHALL BE FLAGGED AND/OR LIGHTED IN ACCORDANCE WITH FAA ADVISORY CIRCULAR 150/5370-2G AND 150/5210-5C OR LATEST EDITION AT ALL TIMES WHILE OPERATING ON AIRPORT PROPERTY. THE MAXIMUM EQUIPMENT HEIGHT IS 25'.

3. BARRICADES SHALL BE PLACED AT THE LOCATIONS SHOWN ON THE CONSTRUCTION SAFETY AND PHASING PLAN SHEET OR AS DIRECTED BY THE ENGINEER.

4. THE CONTRACTOR SHALL INSPECT THE BARRICADES ONCE DURING EACH WORK DAY TO INSURE PROPER PLACEMENT AND PROPER OPERATION OF THE RED LIGHTS AND FLAG PLACEMENT.

5. PAYMENT FOR ALL AIRSIDE AND ROADWAY TRAFFIC CONTROL INCLUDING, BUT NOT LIMITED TO, TEMPORARY CONSTRUCTION FENCING, BARRICADES, SIGNING, AIR OPERATIONS AREA (A.O.A.) LATH AND RIBBON, ETC. SHALL BE CONSIDERED INCIDENTAL TO THE CONTRACT. BARRICADES USED ON THE AIRFIELD MUST BE INTERLOCKING LOW PROFILE BARRICADES. INTERLOCKING LOW PROFILE BARRICADES WITH STEADY BURN RED LIGHTS SHALL BE INTERLOCKED WITH NO GAPS BETWEEN BARRICADES. BARRICADES SHALL BE PLACED AS SHOWN ON THIS PLAN AND AS DIRECTED BY THE ENGINEER FOR WORK ADJACENT TO THE EXPEDITED WORK AREA. WHEN NOT IN USE, THESE BARRICADES SHALL BE STORED AT THE CONTRACTOR'S STAGING AREA OR OFF SITE. ACCESS TO THE ACTIVE RUNWAY AND TAXIWAY PAVEMENTS (TOWER CONTROLLED AREAS) SHALL BE SIGNED WITH STOP SIGNS MOUNTED ON THE CLOSEST BARRICADES (2 EACH, RIGHT AND LEFT) AT THE ENTRANCE. IN ADDITION TO THE STOP SIGNS, WARNING SIGNS (2 EACH, RIGHT AND LEFT) SHALL BE MOUNTED. WARNING SIGNS SHALL STATE "TOWER CONTROL AREA / UNAUTHORIZED ACCESS SUBJECT TO FINE." ALL NON AIRFIELD LOCATIONS REQUIRING BARRICADES SHALL BE TYPE II OR TYPE III BARRICADES AND SHALL CONFORM TO IDOT STANDARD DETAIL 701901-04.

17. WORK ZONE LIGHTING FOR NIGHTTIME CONSTRUCTION

1. WORK PERFORMED BY THE CONTRACTOR OUTSIDE OF DAYLIGHT HOURS SHALL BE DONE UNDER SUFFICIENT ARTIFICIAL AREA LIGHTING TO ALLOW FOR PROPER CONSTRUCTION METHODS AND INSPECTION.

2. LIGHTS SHALL CONSIST OF VEHICLE OR MOVABLE POLE MOUNTED FLOODLIGHTS AND/OR SPOTLIGHTS OF SUFFICIENT NUMBER TO ILLUMINATE THE WORK AREA. VEHICLE HEADLIGHTS WILL BE ALLOWED ONLY IN ADDITION TO OTHER LIGHTS MENTIONED ABOVE. LIGHTING SHALL NOT INTERFERE WITH AIR OPERATIONS. ANY WORK BEING PERFORMED UNDER INSUFFICIENT ARTIFICIAL LIGHTING, IN THE RESIDENT ENGINEER'S JUDGEMENT, SHALL BE STOPPED UNTIL SUCH TIME AS ADDITIONAL LIGHTING IS PROVIDED. ALL WORK PERFORMED DURING THAT TIME WILL NOT BE ACCEPTABLE UNTIL PROPER INSPECTION AND TESTING CAN BE MADE.

18. PROTECTION

1. ALL WORK REQUIRED INSIDE OF A RUNWAY SAFETY AREA, WILL REQUIRE THE RUNWAY TO BE CLOSED.

2. ALL WORK REQUIRED ON AN ACTIVE TAXIWAY OR INSIDE OF AN ACTIVE TAXIWAY OBJECT FREE AREA, WILL REQUIRE THE TAXIWAY TO BE CLOSED.

19. OTHER LIMITATIONS ON CONSTRUCTION

1. IF, DURING CONSTRUCTION, AN EMERGENCY IS DECLARED BY THE AIRPORT, THE CONTRACTOR SHALL IMMEDIATELY CLEAR THE PAVEMENT OF ALL VEHICLES, PERSONNEL AND EQUIPMENT.

2. BROKEN CONCRETE, BROKEN ASPHALT, RUBBISH FROM DEMO, AND OTHER MISCELLANEOUS DEBRIS SHALL BE DISPOSED OF OFF AIRPORT PROPERTY, UNLESS OTHERWISE SPECIFIED.

3. THE CONTRACTOR WILL BE RESPONSIBLE FOR COORDINATING THE AIRSPACE FOR THE CONSTRUCTION EQUIPMENT THAT IS TALLER THAN THAT SPECIFIED ON THE PLANS WITH THE FAA. THIS PROCESS MAY TAKE UP TO 12 WEEKS TO COMPLETE.

4. THE CONTRACTOR SHALL BE RESPONSIBLE FOR MEGGAR TESTING ALL EXISTING CIRCUITS PRIOR TO CONSTRUCTION AND FOLLOWING CONSTRUCTION AS SPECIFIED IN THE CONTRACT DOCUMENTS.

CMT

CONSULTANTS

100% FINAL
JANUARY 12, 2024

REHAB AIRFIELD PAVEMENTS
FED

DuPage Airport Authority

OWNER

DUPAGE AIRPORT
WEST CHICAGO, ILLINOIS

MARK	DATE	DESCRIPTION

AIP PROJ. NO.	
DPA 5065	
CMT PROJECT NO:	22004585.00
CAD DWG FILE:	22004585 - DPA - CSPP NOTES.DWG
DESIGNED BY:	AM
DRAWN BY:	JRO
CHECKED BY:	DKP
APPROVED BY:	DLP
COPYRIGHT:	

SHEET TITLE

CONSTRUCTION SAFETY AND PHASING PLAN GENERAL NOTES - 2

Path: K:\DupageAp\22004585-00_RehabAirfieldPavementsFED\Draw\Sheets\22004585 - dpa - cspp notes.dwg
Date: Wednesday, January 31, 2024 11:16:15 AM

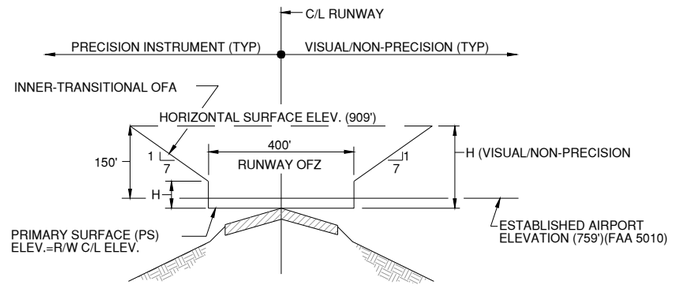

TYPICAL SECTION OBSTACLE FREE ZONE (OFZ)

NO SCALE

RUNWAY	TYPE OF RUNWAY	H (AGL) (FEET)
2L-20R	PRECISION INSTRUMENT	50
2R-20L	NON-PRECISION	150
10-28	PRECISION INSTRUMENT	50
15-33	VISUAL	150

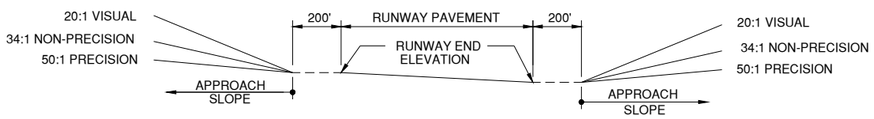

TYPICAL PROFILE F.A.R. PART 77 IMAGINARY SURFACES

NO SCALE

RUNWAY END	ELEVATION (FT.)	APPROACH SLOPE	RUNWAY END	ELEVATION (FT.)	APPROACH SLOPE
2L	751.25'	50:1	20R	755.91'	34:1
2R	750.92'	34:1	20L	758.89'	20:1
10	753.75'	50:1	28	756.36'	34:1
15	756.87'	20:1	33	757.89'	20:1

SOURCE: DATA FROM 2011 DPA DRAFT ALP.
ILLINOIS DIVISION OF AERONAUTICS GPS SURVEY ON 12/03/98 (NAVD 88)

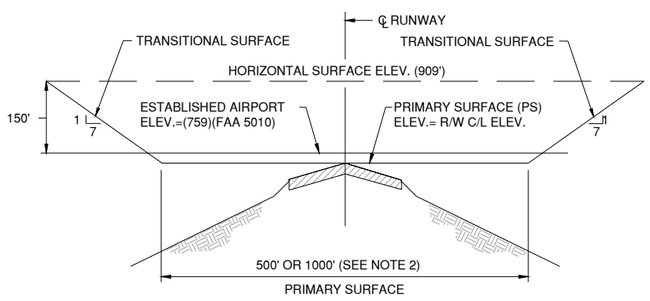

TYPICAL SECTION F.A.R. PART 77 IMAGINARY SURFACES

NO SCALE

PART 77 NOTES:

1. SEE SEQUENCE OF CONSTRUCTION AND GENERAL NOTES FOR RESTRICTED AREAS IN THE VICINITY OF ACTIVE RUNWAYS, TAXIWAYS AND NAVAIDS.

2. IMAGINARY SURFACE REQUIREMENTS FOR EXISTING ACTIVE RUNWAYS ARE SIMILAR. PRIMARY SURFACE (PS) DIMENSIONS VARY BASED ON RUNWAY APPROACH CATEGORY.

   RUNWAY 2L-20R PS = 1000' (500' LT. & RT. OF C/L) = D-III
   RUNWAY 2R-20L PS = 500' (250' LT. & RT. OF C/L) = C-II
   RUNWAY 10-28 PS = 1000' (500' LT. & RT. OF C/L) = B-II
   RUNWAY 15-33 PS = 500' (250' LT. & RT. OF C/L) = B-II

3. MSL = MEAN SEA LEVEL.

   SUBTRACT GROUND ELEVATION FROM MSL ELEVATION FOR ABOVE GROUND CLEARANCE.

AIRFIELD LIGHTS AND SIGNS NOTES FOR CLOSED TAXIWAYS/RUNWAYS

1. CONTRACTOR SHALL COVER ALL AIRFIELD SIGNS AND TAXIWAY LIGHTS ON CLOSED TAXIWAYS UNTIL THE TAXIWAY IS RE-OPENED FOR AIRCRAFT USE. THE METHOD AND MATERIALS USED TO COVER THE SIGNS AND LIGHTS SHALL MEET THE ENGINEER'S AND AIRPORT'S APPROVAL. COST INCIDENTAL TO THE CONTRACT. REMOVING LAMPS FROM ENERGIZED FIXTURES AS A MEANS TO REMOVE THE LIGHTS OR FIXTURES FROM SERVICE SHALL NOT BE ACCEPTABLE.

2. CONTRACTOR SHALL TURN OFF RUNWAY EDGE LIGHTING REGULATOR AND LOCK-OUT/TAG-OUT CIRCUIT BREAKER AND CUT OUT INSIDE THE ELECTRICAL VAULT. DURING ALL RUNWAY CLOSURES. CONTRACTOR SHALL COORDINATE ACCESS TO THE VAULT WITH THE AIRPORT MANAGER/RESIDENT ENGINEER PRIOR TO RE-OPENING THE RUNWAY, THE CONTRACTOR SHALL COORDINATE WITH AIRPORT MANAGER/RESIDENT ENGINEER TO RE-ENERGIZE THE RUNWAY CIRCUIT.

GROUND CONTROL FREQUENCY: 121.8 MHz
AIR CONTROL FREQUENCY: 120.9 MHz

MAXIMUM ANTICIPATED HEIGHT OF CONSTRUCTION EQUIPMENT: DUMP TRUCK IN DUMP POSITION - 25'

IN THE EVENT THE CONTRACTOR PROPOSES TO UTILIZE CONSTRUCTION EQUIPMENT THAT IS TALLER THAN WHAT IS LISTED, THE CONTRACTOR WILL BE RESPONSIBLE TO SUBMIT FAA FORM 7460 FOR AIRSPACE APPROVAL. THE RESIDENT ENGINEER WILL PROVIDE BASE AIRPORT INFORMATION FOR THE CONTRACTOR'S USE.

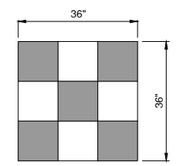

CONSTRUCTION EQUIPMENT AND TRUCK SIGNAL FLAG

NOT TO SCALE

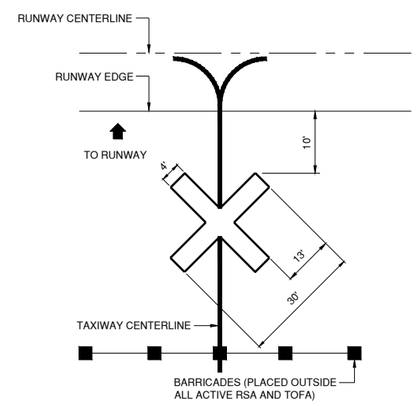

CLOSED TAXIWAY MARKER DETAIL

NOT TO SCALE

CLOSED TAXIWAY MARKER DETAIL NOTES

1. CLOSED TAXIWAY MARKERS SHALL BE PAINTED YELLOW WITH TEMPORARY MARKING CAPABLE OF BEING REMOVED WITH LOW PRESSURE WATER BLASTING OR OTHER MATERIAL THAT DOES NOT VIOLATE THE OBJECT FREE AREA CRITERIA AND RUNWAY SAFETY AREA CRITERIA PER ADVISORY CIRCULAR 150/5300-13 (LATEST EDITION) AND ARE APPROVED BY THE RESIDENT ENGINEER AND AIRPORT.

2. CONTRACTOR SHALL MAINTAIN AND RELOCATE MARKERS AS SHOWN ON THE PLANS OR AS NEEDED TO FACILITATE CONSTRUCTION

3. COST OF FURNISHING, INSTALLING, MAINTAINING AND REMOVING MARKERS SHALL BE CONSIDERED INCIDENTAL TO THE CONTRACT.

4. PLACE MARKERS OVER TAXIWAY CENTERLINE.

5. MARKERS SHALL BE ADEQUATELY SECURED TO PREVENT MOVEMENT BY PROPELLER WASH, JET BLAST OR OTHER WIND CURRENTS.

6. MARKERS ARE ONLY REQUIRED FOR CLOSURES EXCEEDING 72 HOURS OR AS REQUIRED BY THE AIRPORT.

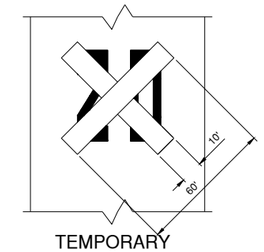

TEMPORARY CLOSED RUNWAY MARKER DETAIL

ON PAVEMENT - NO SCALE

CLOSED RUNWAY MARKER NOTES

1. DURING VARIOUS PHASES OF WORK, IT WILL BE NECESSARY TO CLOSE RUNWAYS TO AIR TRAFFIC ON A TEMPORARY BASIS AS COORDINATED WITH THE AIRPORT AND TOWER PERSONNEL.

2. FOR RUNWAY CLOSURES, IT IS ANTICIPATED THAT THE AIRPORT SHALL PROVIDE THE CONTRACTOR WITH AIRPORT OWNED LIGHTED "X"S FOR USE ON EACH END OF THE CLOSED RUNWAY(S). IF ANY DAMAGE IS INCURRED TO THE AIRPORT LIGHTED "X"S DURING CONSTRUCTION, THE CONTRACTOR SHALL REPLACE THE LIGHTED "X" IN KIND AT NO COST TO THE CONTRACT OR AIRPORT. THE CONTRACTOR SHALL MOBILIZE AND MAINTAIN THE AIRPORT LIGHTED "X"S FOR THE DURATION OF THE PROJECT AS NEEDED TO FACILITATE CONSTRUCTION. MAINTAINING THE LIGHTED "X"S SHALL INCLUDE BUT NOT BE LIMITED TO FUELING OF THE EQUIPMENT. THE CONTRACTOR SHALL COORDINATE WITH THE AIRPORT ON MAINTENANCE OF THE LIGHTED "X"S (INCIDENTAL AND AT THE CONTRACTOR'S EXPENSE).

3. FOR RUNWAY CLOSURES INVOLVING MORE THAN TWO RUNWAYS, OR IF THE AIRPORT OWNED LIGHTED "X"S ARE NOT AVAILABLE, THE CONTRACTOR SHALL MARK THE RUNWAYS TO BE CLOSED BY PLACING YELLOW CROSS(ES) AT THE LOCATION AND DIMENSIONS DETAILED ON THE SEQUENCE OF CONSTRUCTION AND PER AC 150/5370-2F (LATEST EDITION). THE CROSSES ARE SHOWN ON THE RESPECTIVE RUNWAYS ACCORDING TO THE VARIOUS PHASES OF WORK AS DELINEATED IN THE SUGGESTED SEQUENCE OF CONSTRUCTION. THE CONTRACTOR SHALL HAVE THE YELLOW CROSSES AVAILABLE IF THE AIRPORT OWNED LIGHTED "X"S ARE NOT AVAILABLE FOR THE CONTRACTOR TO USE.

4. TEMPORARY CLOSED RUNWAY MARKERS SHALL BE YELLOW.

5. TEMPORARY MARKERS SHALL BE MATERIAL APPROVED BY THE ENGINEER.

6. CONTRACTOR SHALL MAINTAIN AND RELOCATE MARKERS AS SHOWN ON THE PLANS OR AS NEEDED TO FACILITATE CONSTRUCTION

7. MARKERS ON PAVEMENT SHALL BE PLACED OVER EXISTING RUNWAY NUMERALS AS SHOWN.

8. COST OF FURNISHING, INSTALLING, MAINTAINING AND REMOVING MARKERS SHALL BE CONSIDERED INCIDENTAL AND AT THE CONTRACTOR'S EXPENSE.

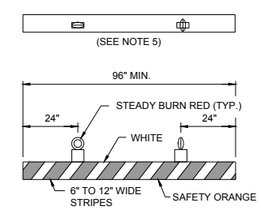

INTERLOCKING LOW PROFILE BARRICADES

ON PAVEMENT - NO SCALE

NOTES

1 . LOW PROFILE BARRICADES SHALL BE PLACED AT LOCATIONS SHOWN ON THE PLANS OR AS DIRECTED BY THE RESIDENT ENGINEER. THE BARRICADES SHALL BE INTERLOCKED WITH NO GAPS BETWEEN BARRICADES. BARRICADES SHALL BE WEIGHTED WITH A MINIMUM OF 6 SAND BAGS TO PREVENT THEM FROM BEING BLOWN OVER.

2. THE BARRICADE LINE SHALL EXTEND ONE BARRICADE PAST THE EDGE OF PAVEMENT INTO THE TURF.

3. LIGHTS SHALL BE BATTERY OPERATED. LENS SHALL BE RED AND BE ABLE TO ROTATE 90°.

4. FACING OF BARRICADE SHALL BE COVERED WITH REFLECTIVE TAPE OR PAINT.

5. ALTERNATE LENSES SO THAT EVERY OTHER LENS IS ROTATED 90°.

6. BARRICADES SHALL BE OF LOW MASS, EASILY COLLAPSIBLE UPON CONTACT WITH AN AIRCRAFT OR ANY OF IT'S COMPONENTS, AND WEIGHTED OR STURDILY ATTACHED TO THE SURFACE. IF AFFIXED TO THE SURFACE, THE BARRICADE MUST BE FRANGIBLE AT GRADE LEVEL OR AS LOW POSSIBLE, BUT NOT TO EXCEED 3 INCHES ABOVE THE GROUND.

7. ALL COST ASSOCIATED WITH THE LOW PROFILE BARRICADES SHALL BE CONSIDERED INCIDENTAL TO THE CONTRACT.

CMT

CONSULTANTS

100% FINAL
JANUARY 12, 2024

REHAB AIRFIELD PAVEMENTS
FED

DUPAGE AIRPORT AUTHORITY

OWNER

DUPAGE AIRPORT
WEST CHICAGO, ILLINOIS

MARK	DATE	DESCRIPTION

AIP PROJ. NO.	
DPA 5065	
CMT PROJECT NO:	22004585.00
CAD DWG FILE:	22004585 - DPA - CSPP NOTES.DWG
DESIGNED BY:	AM
DRAWN BY:	JRO
CHECKED BY:	DKP
APPROVED BY:	DLP
COPYRIGHT:	

SHEET TITLE

CONSTRUCTION SAFETY AND PHASING DETAILS

SHEET 9 OF 20

Path: K:\Dupage\p\22004585-00_RehabAirfieldPavementsFED\Draw\Sheets\22004585 - dpa - cspp notes.dwg
Date: Wednesday, January 31, 2024 11:16:15 AM

AREA 10 - BASE BID AND AREA 1 AND 2 - ADDITIVE ALTERNATE NO. 1

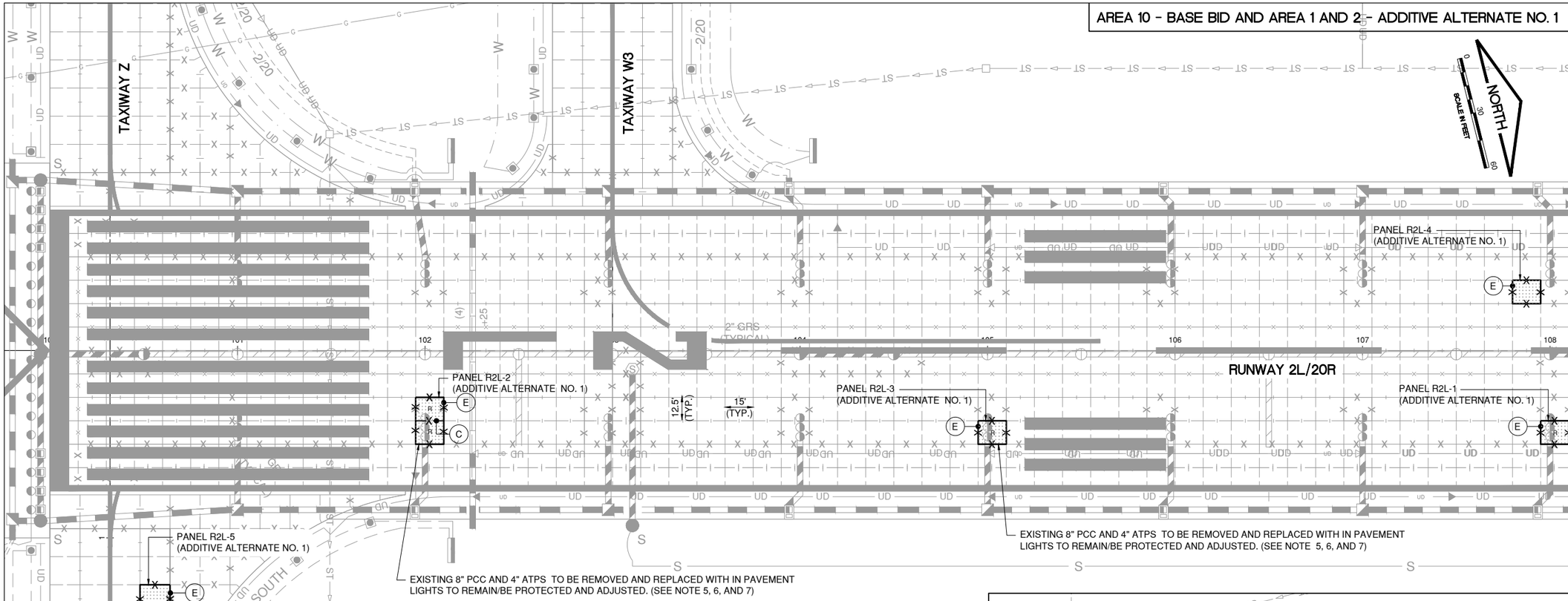

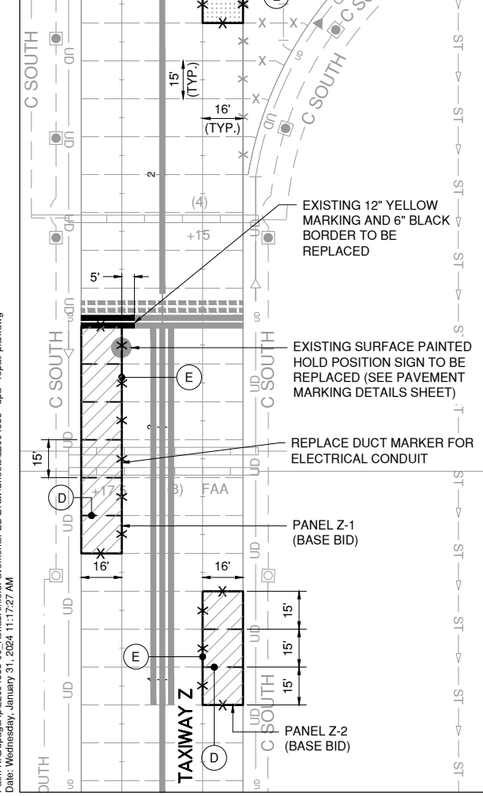

NOTES

1. EXISTING 8" PCC PAVEMENT AND 4" ATPS TO BE REMOVED TO THE LIMITS SHOWN AND REPLACED. SEE PAVEMENT JOINTING DETAILS FOR ADDITIONAL INFORMATION FOR PROPOSED JOINTING.
2. ALL COST ASSOCIATED WITH ATPS REMOVAL SHALL BE INCLUDED IN THE CONTRACT UNIT PRICE OF THE ASSOCIATED CONCRETE PAVEMENT REMOVAL ITEM.
3. CONTRACTOR SHALL MILL EXISTING PCC PAVEMENT BY MATCHING EXISTING RUNWAY EDGE ELEVATION (±3/4" MAX. DEPTH) AND TAPER MILLING DEPTH TO MATCH EXISTING PAVEMENT ELEVATION AT LIMITS OF MILLING.
4. ANY EXISTING PAVEMENT JOINT SEALANT DISTURBED BY MILLING OPERATIONS SHALL BE RESTORED TO ITS ORIGINAL CONDITION. COST OF PAVEMENT JOINT SEALANT RESTORATION SHALL BE INCLUDED IN THE UNIT PRICE OF PCC MILLING.
5. IN PAVEMENT LIGHTS TO HAVE EXISTING PCC SAW CUT AND STRIPPED AFTER REMOVAL. COST OF SAWCUTTING AND DISPOSAL OF PAVEMENT SHALL BE CONSIDERED INCIDENTAL TO THE PCC PAVEMENT REMOVAL PAY ITEM.
6. IT IS THE CONTRACTOR'S RESPONSIBILITY TO MAINTAIN EXISTING IN-PAVEMENT BASE CAN AND CONDUIT. ANY BASE CAN OR CONDUIT DAMAGED DURING CONSTRUCTION SHALL BE REPLACED AT THE CONTRACTOR'S EXPENSE.
7. ALL WORK REQUIRED TO PREPARE EXISTING IN-PAVEMENT BASE CAN AND CONDUIT FOR PAVING OPERATIONS SHALL BE INCIDENTAL TO THE ASSOCIATED PAVING PAY ITEM.

LEGEND

- EXISTING PCC PAVEMENT ATPS/REMOVAL AND REPLACEMENT (PCC 8")(CRUSHED AGGREGATE BASE 4")
- EXISTING PCC PAVEMENT ATPS/REMOVAL AND REPLACEMENT WITH HIGH EARLY MIX (PCC 8" HIGH EARLY MIX)(CRUSHED AGGREGATE BASE 4")
- HMA PAVEMENT MILLING 4" AND WITH 2" HMA BASE AND 2" HMA SURFACE OVERLAY (SEE NOTE)
- EXISTING PCC PAVEMENT MILLING DIAMOND GRINDING
- NEW PAVEMENT MARKING
- (B) TYPE B - HINGED CONTRACTION JOINT
- (C) TYPE C DOWELED CONTRACTION JOINT
- (D) TYPE D - DUMMY CONTRACTION JOINT
- (E) TYPE E -- DOWELED CONSTRUCTION JOINT
- R WELDED WIRE FABRIC MESH REINFORCED PANEL

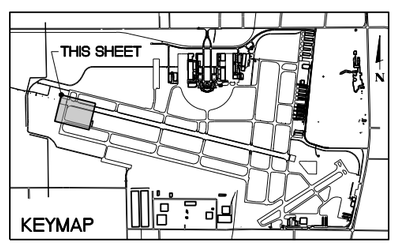

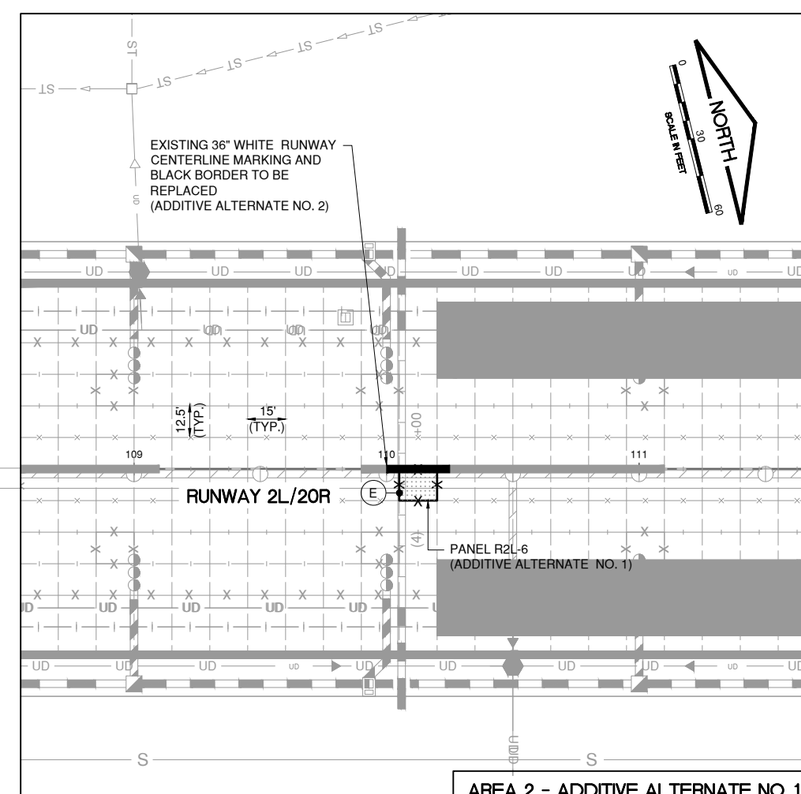

AREA 2 - ADDITIVE ALTERNATE NO. 1

CMT

CONSULTANTS

100% FINAL
JANUARY 12, 2024

REHAB AIRFIELD PAVEMENTS
FED

DUPAGE AIRPORT AUTHORITY

OWNER

DUPAGE AIRPORT
WEST CHICAGO, ILLINOIS

MARK	DATE	DESCRIPTION

AIP PROJ. NO.	
DPA 5065	
CMT PROJECT NO:	22004585.00
CAD DWG FILE:	22004585 - DPA - REPAIR PLAN.DWG
DESIGNED BY:	AM
DRAWN BY:	JRO
CHECKED BY:	DKP
APPROVED BY:	DLP
COPYRIGHT:	

SHEET TITLE

REHABILIATE
RUNWAY 2L-20R - 1

SHEET 10 OF 20

Path: K:\DupageAp\22004585-00_RehabAirfieldPavementsFED\Draw\Sheets\22004585 - dpa - repair plan.dwg
Date: Wednesday, January 31, 2024 11:17:27 AM

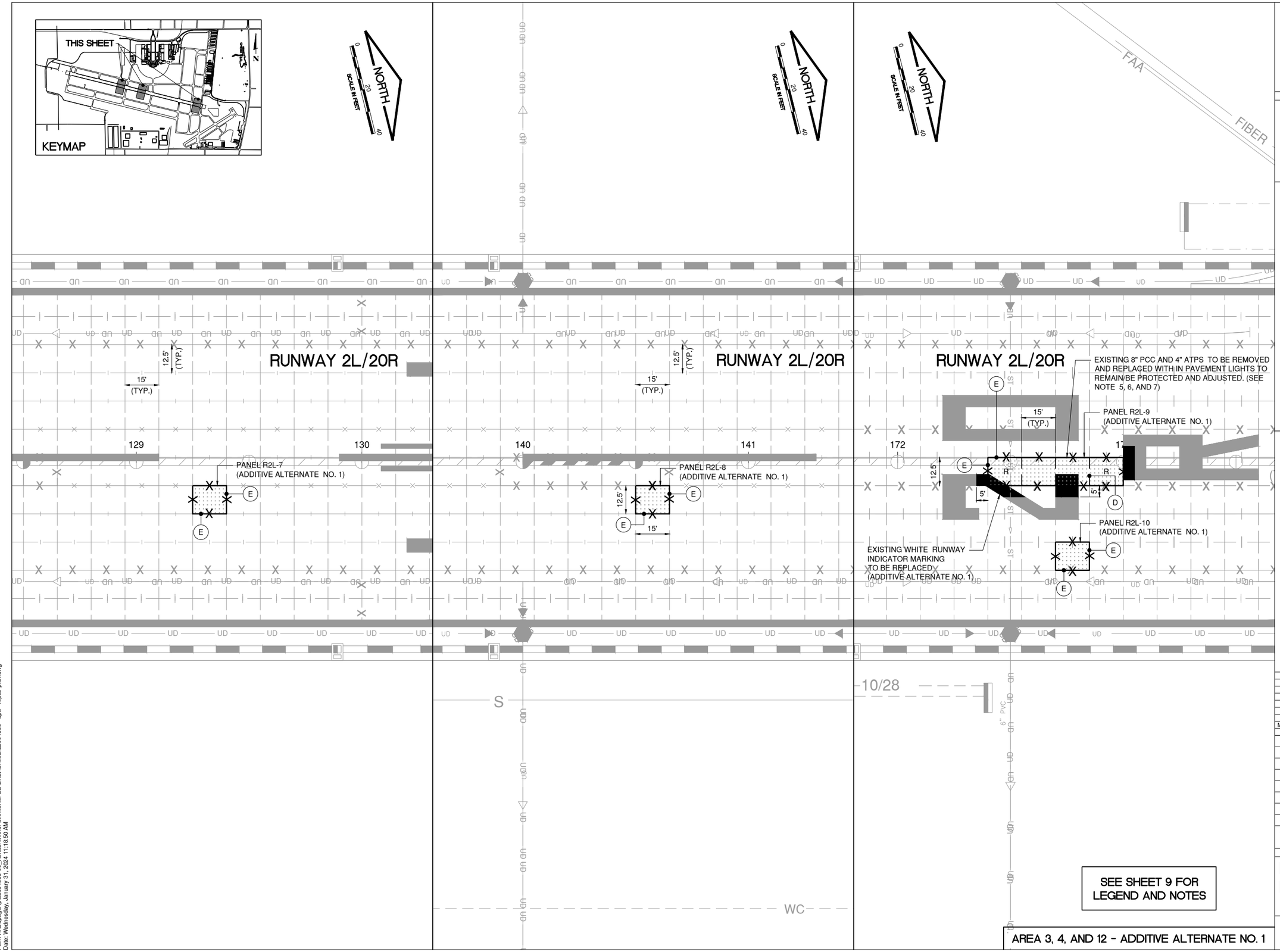

SEE SHEET 9 FOR LEGEND AND NOTES

AREA 3, 4, AND 12 - ADDITIVE ALTERNATE NO. 1

CMT

CONSULTANTS

100% FINAL
JANUARY 12, 2024

REHAB AIRFIELD PAVEMENTS
FED

DuPage Airport Authority

OWNER

DUPAGE AIRPORT
WEST CHICAGO, ILLINOIS

MARK	DATE	DESCRIPTION

AIP PROJ. NO.	
DPA 5065	
CMT PROJECT NO:	22004585.00
CAD DWG FILE:	22004585 - DPA - REPAIR PLAN.DWG
DESIGNED BY:	AM
DRAWN BY:	JRO
CHECKED BY:	DKP
APPROVED BY:	DLP
COPYRIGHT:	

SHEET TITLE

REHABILIATE
RUNWAY 2L-20R - 2

SHEET 11 OF 20

Path: K:\Dupage\dp22004585-00_RehabAirfieldPavementsFED\Draw\Sheets\22004585 - dpa - repair plan.dwg
Date: Wednesday, January 31, 2024 11:18:50 AM

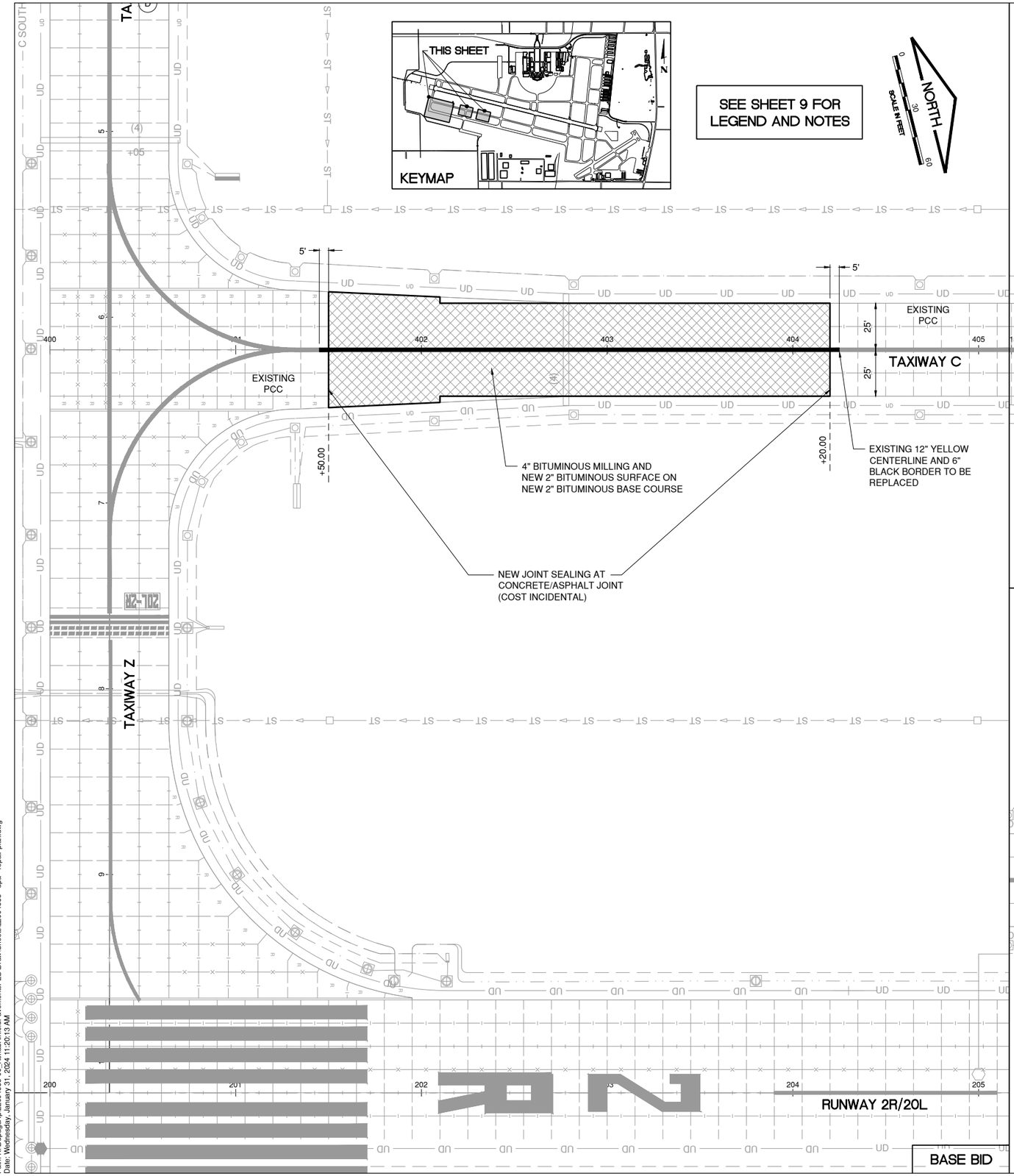

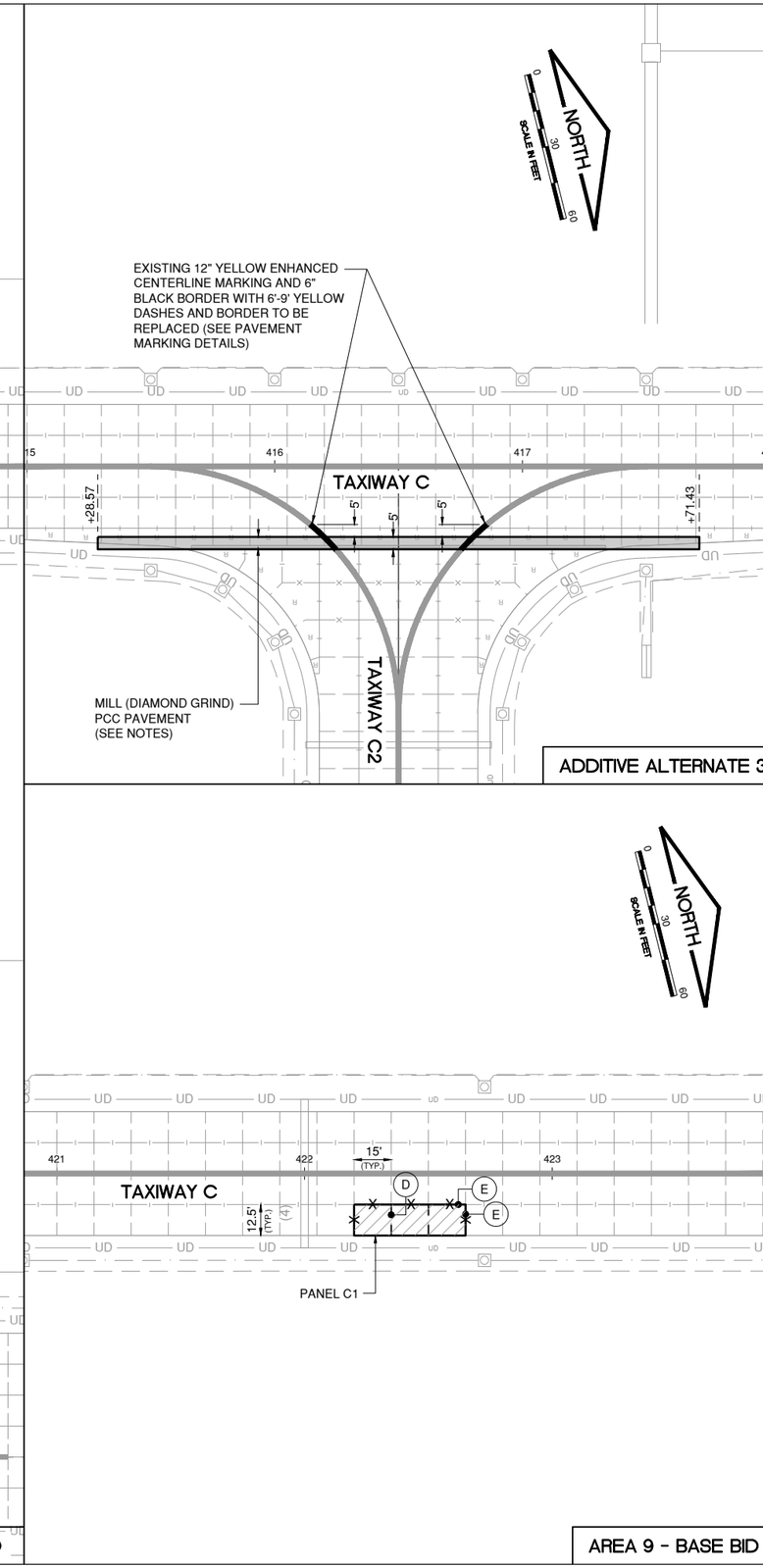

CMT

CONSULTANTS

100% FINAL
JANUARY 12, 2024

REHAB AIRFIELD PAVEMENTS
FED

DuPage Airport Authority

OWNER

DUPAGE AIRPORT
WEST CHICAGO, ILLINOIS

MARK	DATE	DESCRIPTION

AIP PROJ. NO.	
DPA 5065	
CMT PROJECT NO:	22004585.00
CAD DWG FILE:	22004585 - DPA - REPAIR PLAN.DWG
DESIGNED BY:	AM
DRAWN BY:	JRO
CHECKED BY:	DKP
APPROVED BY:	DLP
COPYRIGHT:	

SHEET TITLE

REHABILITATE TAXIWAY C - 1

Path: K:\DupageAp\22004585-00_RehabAirfieldPavementsFED\Draw\Sheets\22004585 - dpa - repair plan.dwg
Date: Wednesday, January 31, 2024 11:20:13 AM

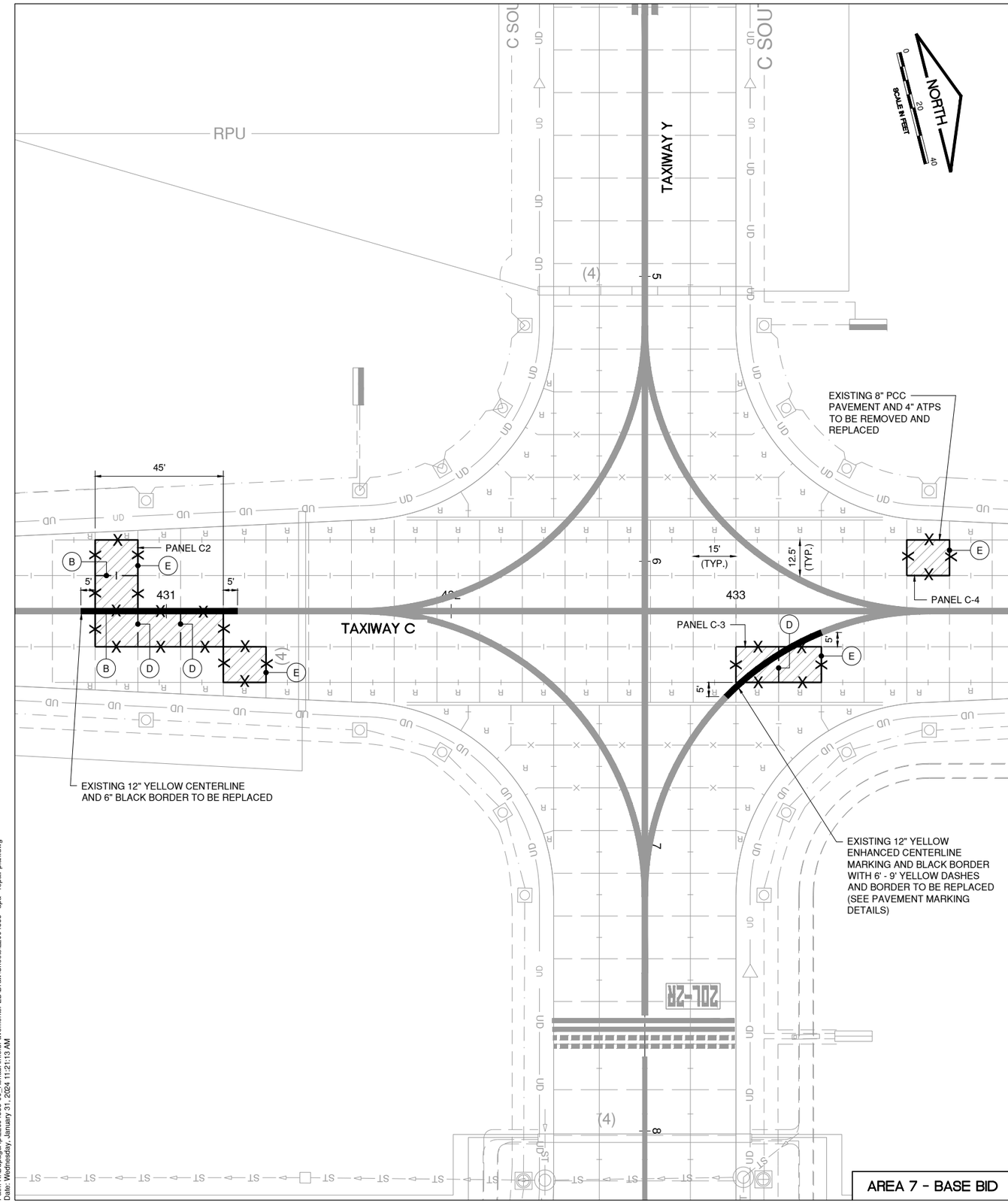

AREA 7 - BASE BID

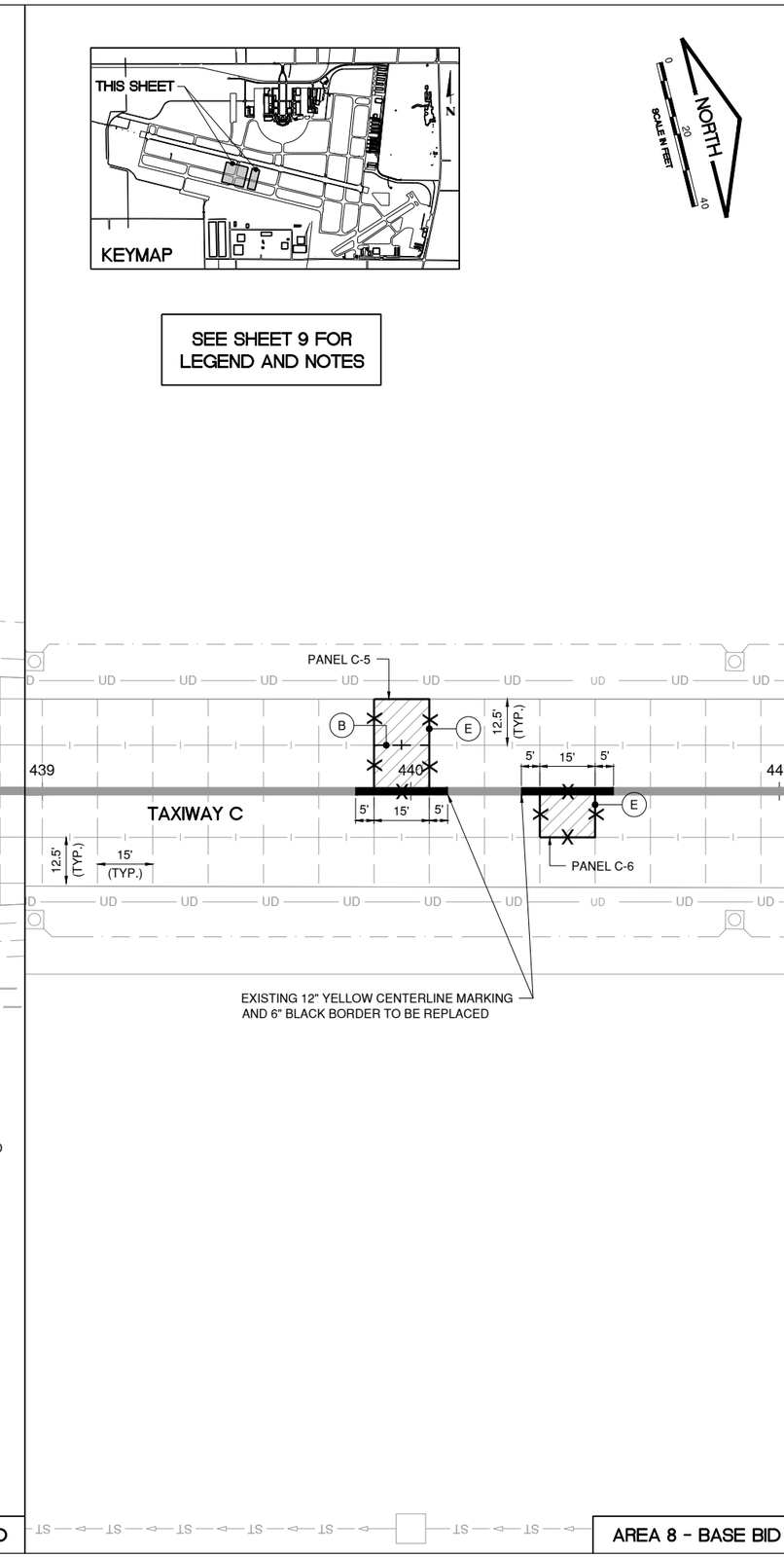

AREA 8 - BASE BID

SEE SHEET 9 FOR LEGEND AND NOTES

CMT

CONSULTANTS

100% FINAL
JANUARY 12, 2024

REHAB AIRFIELD PAVEMENTS
FED

DuPage Airport Authority

OWNER

DUPAGE AIRPORT
WEST CHICAGO, ILLINOIS

MARK	DATE	DESCRIPTION

AIP PROJ. NO.	
DPA 5065	
CMT PROJECT NO:	22004585.00
CAD DWG FILE:	22004585 - DPA - REPAIR PLAN.DWG
DESIGNED BY:	AM
DRAWN BY:	JRO
CHECKED BY:	DKP
APPROVED BY:	DLP
COPYRIGHT:	

SHEET TITLE

REHABILITATE TAXIWAY C - 2

SHEET 13 OF 20

Path: K:\DupageAp\22004585-00_RehabAirfieldPavementsFED\Draw\Sheets\22004585 - dpa - repair plan.dwg
Date: Wednesday, January 31, 2024 11:21:13 AM

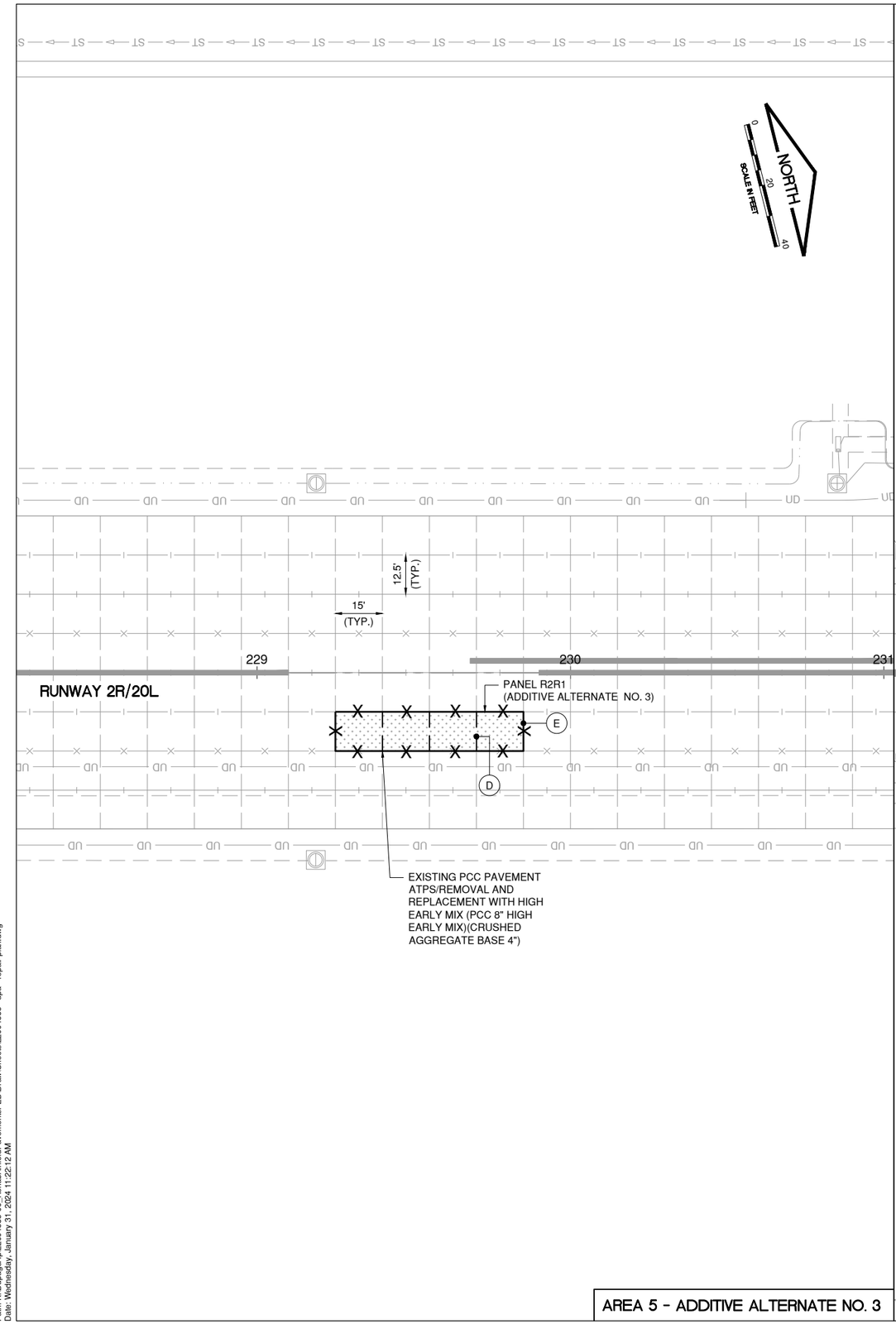

AREA 5 - ADDITIVE ALTERNATE NO. 3

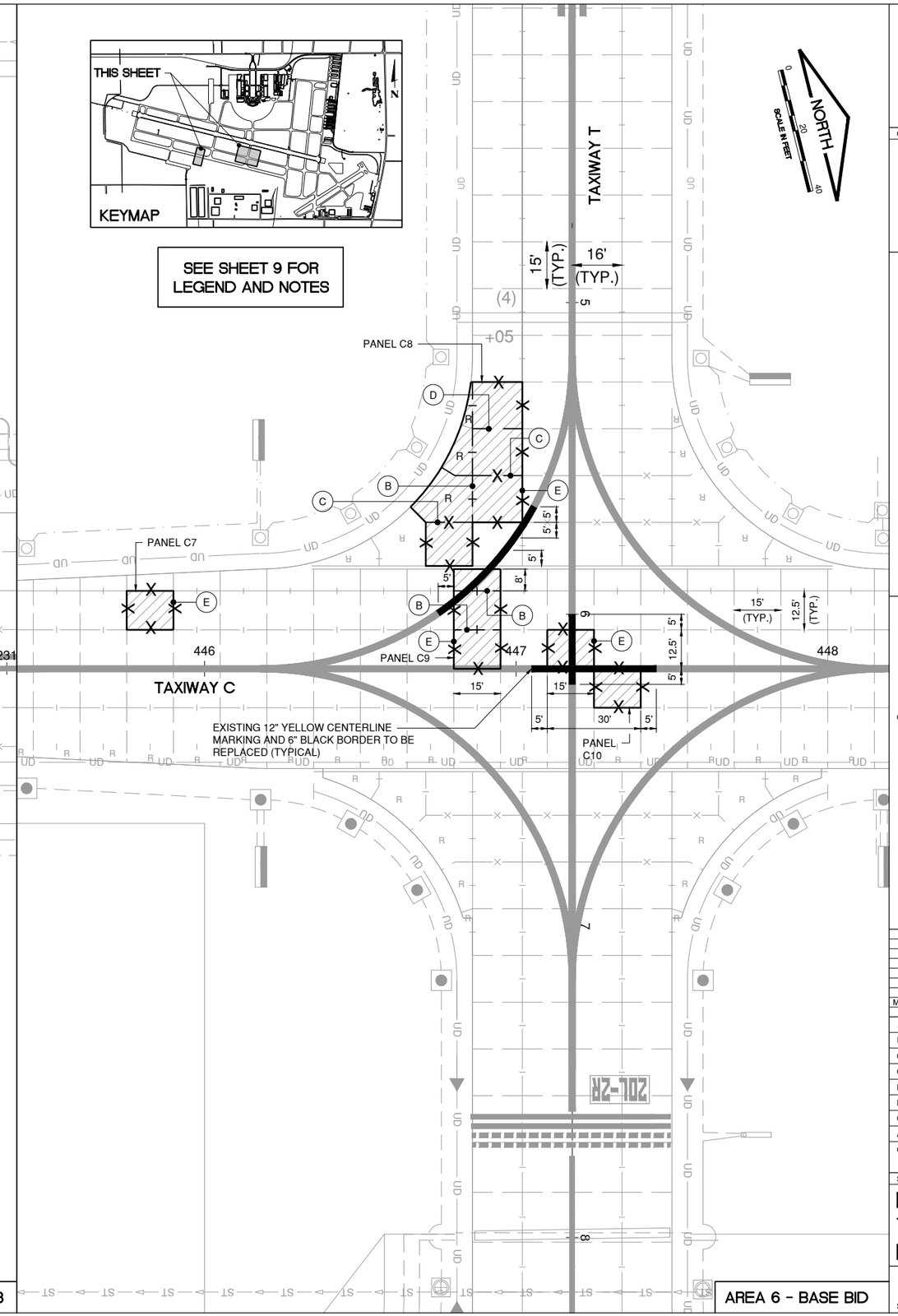

AREA 6 - BASE BID

CMT

CONSULTANTS

100% FINAL
JANUARY 12, 2024

REHAB AIRFIELD PAVEMENTS
FED

DuPage Airport Authority

OWNER

DUPAGE AIRPORT
WEST CHICAGO, ILLINOIS

MARK	DATE	DESCRIPTION

AIP PROJ. NO.	
DPA 5065	
CMT PROJECT NO:	22004585.00
CAD DWG FILE:	22004585 - DPA - REPAIR PLAN.DWG
DESIGNED BY:	AM
DRAWN BY:	JRO
CHECKED BY:	DKP
APPROVED BY:	DLP
COPYRIGHT:	

SHEET TITLE

REHABILITATE TAXIWAY C-3 AND RUNWAY 2R-20L

SHEET 14 OF 20

Path: K:\DupageAp\22004585-00_RehabAirfieldPavementsFED\Draw\Sheets\22004585 - dpa - repair plan.dwg
Date: Wednesday, January 31, 2024 11:22:12 AM

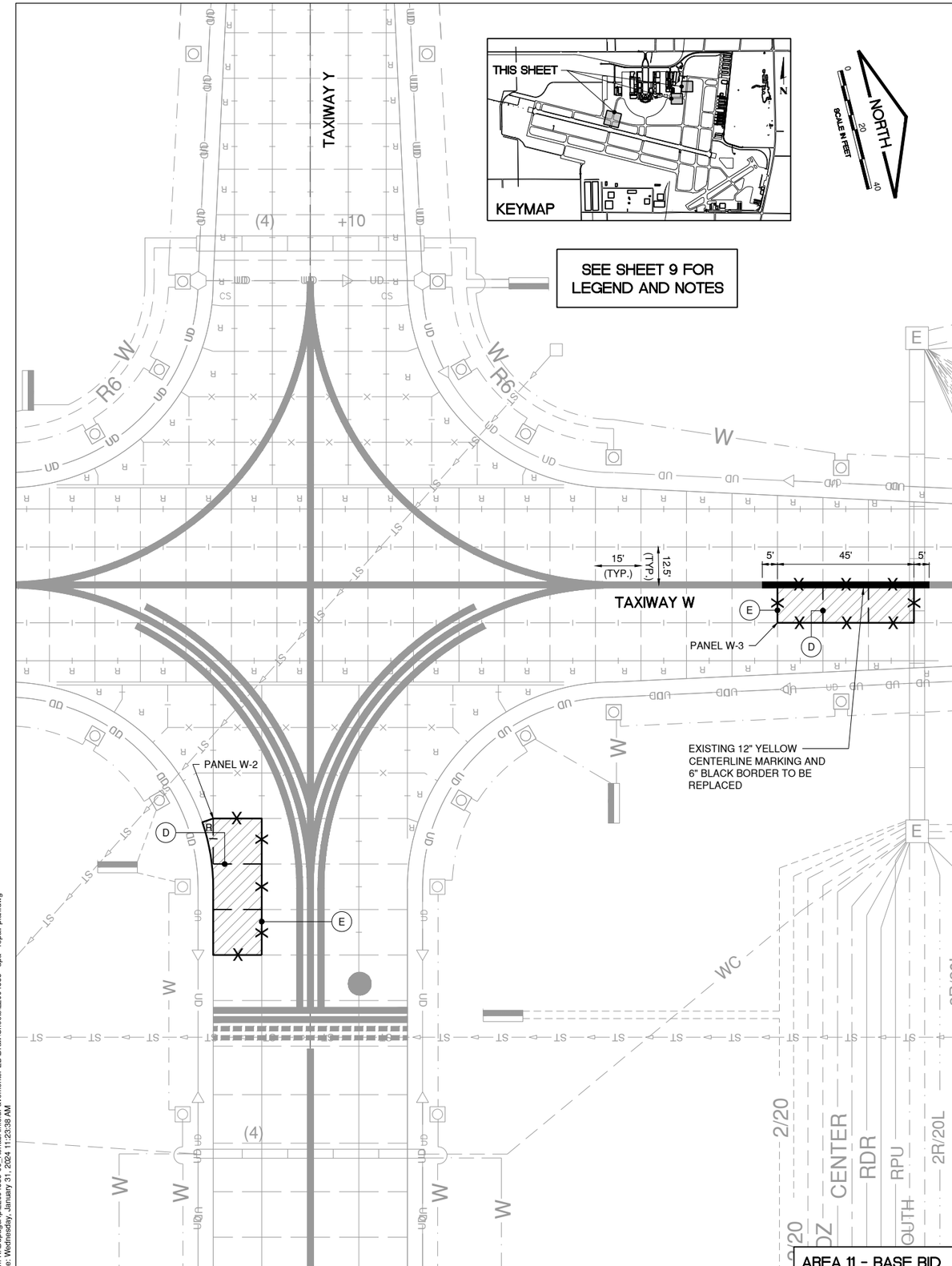

AREA 11 - BASE BID

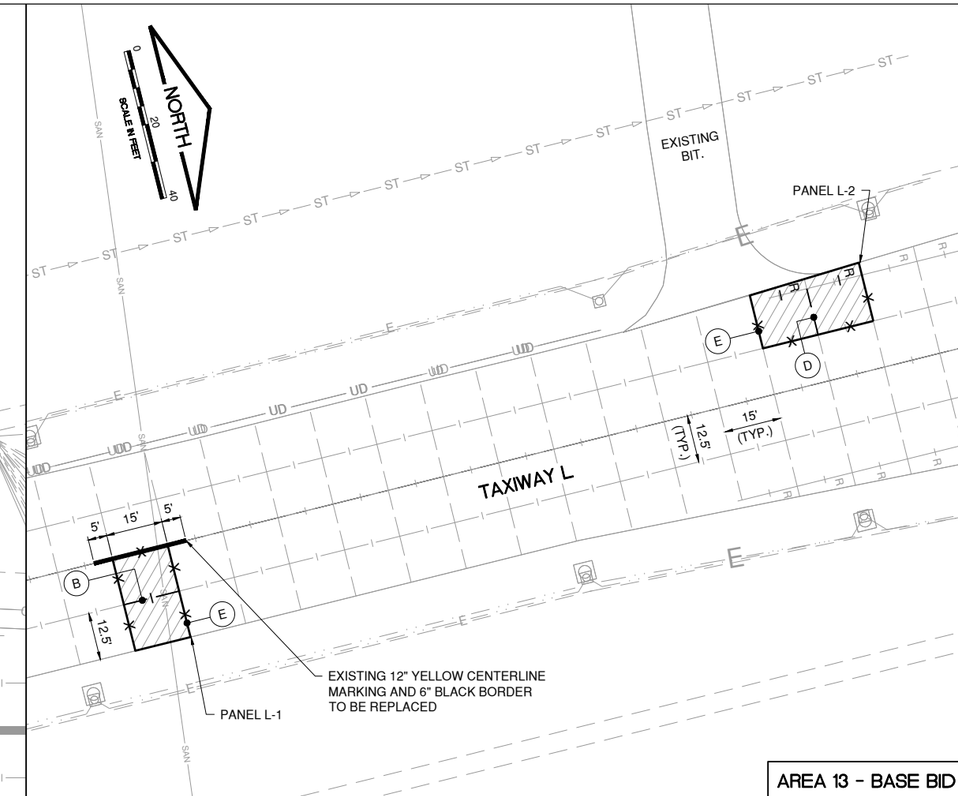

AREA 13 - BASE BID

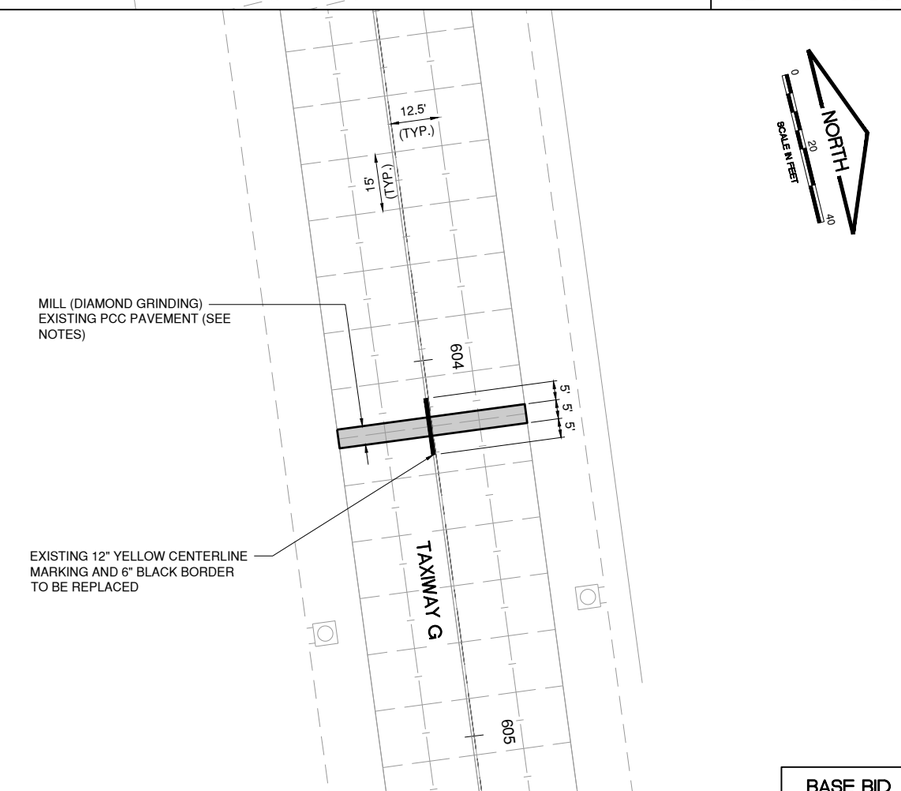

BASE BID

CMT

CONSULTANTS

100% FINAL
JANUARY 12, 2024

REHAB AIRFIELD PAVEMENTS
FED

DUPAGE AIRPORT AUTHORITY

OWNER

DUPAGE AIRPORT
WEST CHICAGO, ILLINOIS

MARK	DATE	DESCRIPTION

AIP PROJ. NO.	
DPA 5065	
CMT PROJECT NO:	22004585.00
CAD DWG FILE:	22004585 - DPA - REPAIR PLAN.DWG
DESIGNED BY:	AM
DRAWN BY:	JRO
CHECKED BY:	DKP
APPROVED BY:	DLP
COPYRIGHT:	

SHEET TITLE

REHABILITATE
TAXIWAY W, L AND G

SHEET 15 OF 20

Path: K:\DupageApt-22004585-00_RehabAirfieldPavementsFED\DrawSheets\22004585 - dpa - repair plan.dwg
Date: Wednesday, January 31, 2024 11:23:38 AM

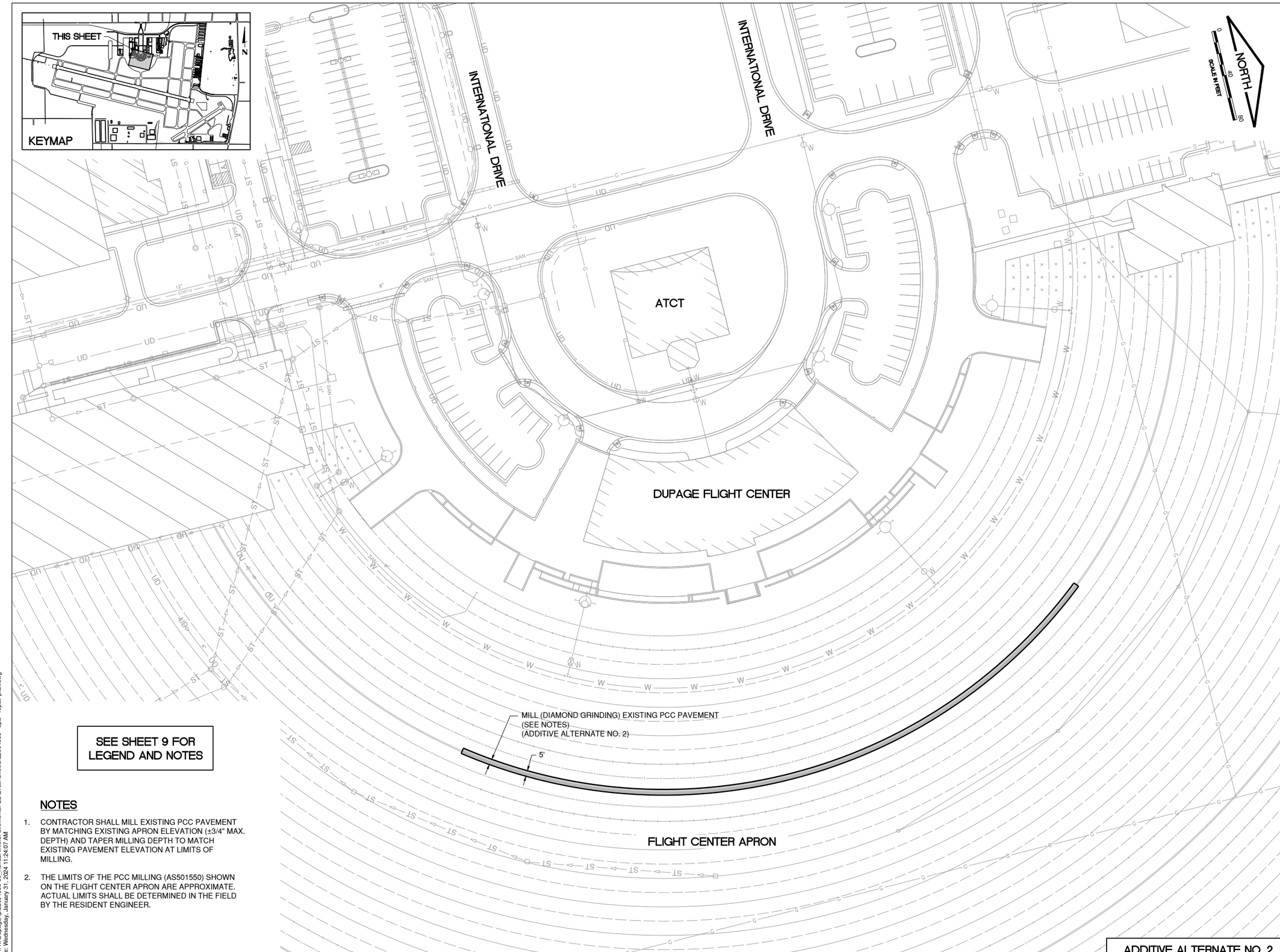

SEE SHEET 9 FOR LEGEND AND NOTES

NOTES

1. CONTRACTOR SHALL MILL EXISTING PCC PAVEMENT BY MATCHING EXISTING APRON ELEVATION (±3/4" MAX. DEPTH) AND TAPER MILLING DEPTH TO MATCH EXISTING PAVEMENT ELEVATION AT LIMITS OF MILLING.
2. THE LIMITS OF THE PCC MILLING (AS501550) SHOWN ON THE FLIGHT CENTER APRON ARE APPROXIMATE. ACTUAL LIMITS SHALL BE DETERMINED IN THE FIELD BY THE RESIDENT ENGINEER.

ADDITIVE ALTERNATE NO. 2

CMT

CONSULTANTS

100% FINAL
JANUARY 12, 2024

REHAB AIRFIELD PAVEMENTS
FED

DUPAGE AIRPORT AUTHORITY

OWNER

DUPAGE AIRPORT
WEST CHICAGO, ILLINOIS

MARK	DATE	DESCRIPTION

AIP PROJ. NO.	
DPA 5065	
CMT PROJECT NO:	22004585.00
CAD DWG FILE:	22004585 - DPA - REPAIR PLAN.DWG
DESIGNED BY:	AM
DRAWN BY:	JRO
CHECKED BY:	DKP
APPROVED BY:	DLP
COPYRIGHT:	

SHEET TITLE

REHABILITATE FLIGHT CENTER APRON

Path: K:\DupageAp\22004585-00_RehabAirfieldPavementsFED\Draw\Sheets\22004585 - dpa - repair plan.dwg
Date: Wednesday, January 31, 2024 11:24:07 AM

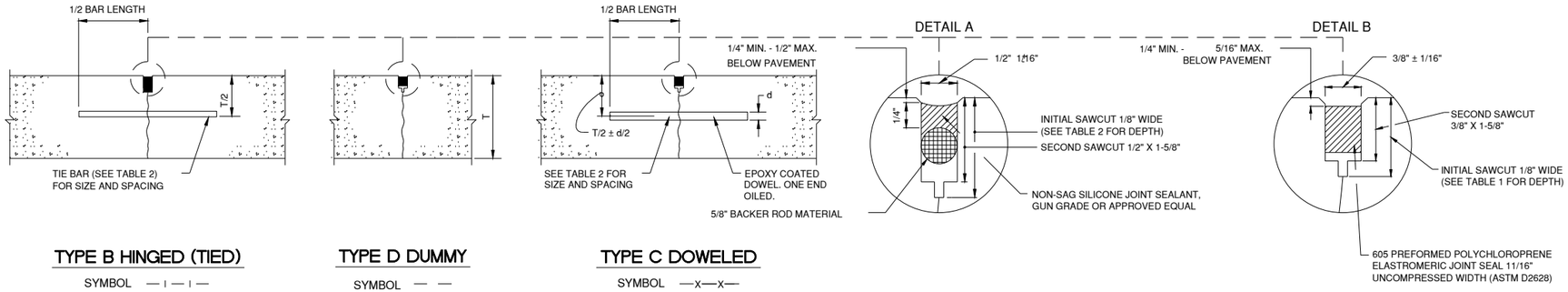

TYPE B HINGED (TIED)

SYMBOL — I — I —

TYPE D DUMMY

SYMBOL — —

TYPE C DOWELED

SYMBOL —x—x—

CONTRACTION JOINTS

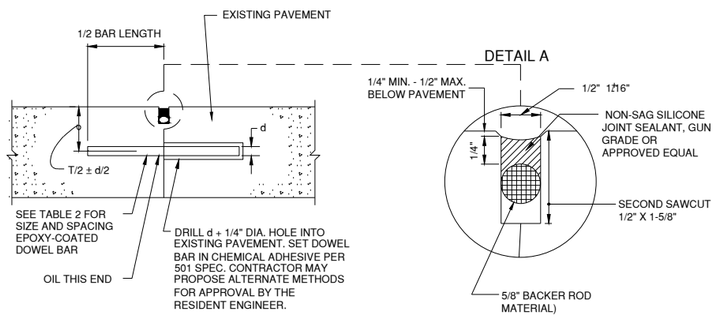

TYPE E DOWELED

SYMBOL —x—x—x—

CONSTRUCTION JOINTS

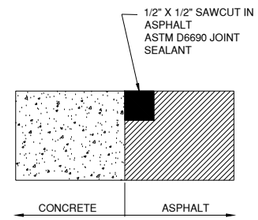

JOINT SEALING AT CONCRETE ASPHALT INTERFACE

N.T.S.

NOTE: JOINT DIMENSIONS SHALL MEET MANUFACTURER'S RECOMMENDATION

JOINT NOTES

1. ALL EDGES OF NEW SLABS, FREE STANDING OR CLOSURE, SHALL BE EDGED WITH AN APPROVED TOOL HAVING A RADIUS OF 1/8" TO 1/4" TO FACILITATE SAWING OF THE SEALANT RESERVOIR. A RADIUS > 1/4" WILL NOT BE ACCEPTABLE.
2. THE INITIAL SAWCUT FOR ALL LONGITUDINAL AND TRANSVERSE CONTRACTION JOINTS SHALL BE SAWED AS SOON AS POSSIBLE AFTER PLACEMENT OF THE PAVEMENT. SAWING OF LONGITUDINAL CONTRACTION JOINTS ADJACENT TO THE THICKENED EDGES SHALL BE GIVEN PRIORITY OVER OTHER LONGITUDINAL JOINT SAWING.
3. ALL DOWEL BARS SHALL BE SECURELY HELD IN PLACE BY MEANS OF A DOWEL BAR ASSEMBLY, WHICH WILL INSURE THAT THEY WILL REMAIN PARALLEL TO THE PAVEMENT LANES. THE DOWEL BAR ASSEMBLIES SHALL BE APPROVED BY THE ENGINEER PRIOR TO INSTALLATION.
4. ALL TIE BARS AND MESH SHALL BE SECURELY HELD IN PLACE BY SUPPORT PINS OR PLACED BY OTHER APPROVED METHODS TO PREVENT SHIFTING DURING AND AFTER CONCRETE PLACEMENT.
5. TIE BARS SHALL BE DEFORMED BARS IN CONFORMANCE WITH ASTM A615 OR ASTM A616, EXCEPT THAT RAIL STEEL BARS, GRADE 50 OR 60 SHALL NOT BE USED FOR THE BARS THAT ARE TO BE BENT OR RESTRAIGHTEND DURING CONSTRUCTION. TIE BARS DESIGNATED AS GRADE 40 IN ASTM A615 CAN BE USED FOR CONSTRUCTION REGARDING BENT BARS.
6. THE INITIAL SAWCUT SHALL BE MADE TO THE 1/8" WIDTH INDICATED. INITIAL SAWING TO THE DIMENSION OF THE SECOND SAWCUT WILL NOT BE ALLOWED.
7. JOINTS SHALL BE DRY AND CLEAN BEFORE SEALING OPERATIONS BEGIN.
8. COST OF ALL JOINT SAWING, CLEANING AND SEALING OF NEW CONCRETE PAVEMENT SHALL BE CONSIDERED INCIDENTAL TO THE ASSOCIATED PAY ITEM AND NO SEPARATE PAYMENT SHALL BE MADE.
9. SHOULD THE POURING OPERATIONS REQUIRE THE INSERTION OF AN INTERMEDIATE HEADER, A DOWEL BASKET ASSEMBLY OR OTHER APPROVED METHOD OF DOWEL BAR PLACEMENT SHALL BE REQUIRED.
10. DOWEL BASKET ASSEMBLIES MEETING IDOT APPROVAL MAY BE PROPOSED BY THE CONTRACTOR TO BE APPROVED BY THE ENGINEER. DOWELS IN THE APPROVED BASKET ASSEMBLIES SHALL CONFORM TO TABLE 2.
11. CONTRACTOR SHALL CONSTRUCT A 1/4" CHAMFER ON ALL CONCRETE JOINTS PER THE DETAIL ON THIS SHEET AT NO ADDITIONAL COST.

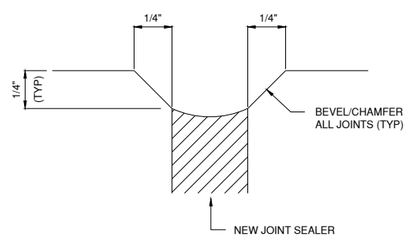

CHAMFER/BEVEL JOINT DETAIL

NOT TO SCALE

TABLE 1

PAVEMENT THICKNESS T - INCHES	DEPTH OF CONTRACTION JOINT INITIAL SAW CUT T, INCHES T=(T/4) ±1/4"
6	1.50"
8	2.00"

TABLE 2

PAVEMENT THICKNESS T - INCHES	DOWEL BAR DETAILS			TIE BAR DETAILS		
	DIA. (d)	LENGTH	SPACING	BAR SIZE	LENGTH	SPACING
6	3/4"	18"	12"	#5	30"	30"
8	1"	19"	12"	#5	30"	30"

DIMENSION TABLES

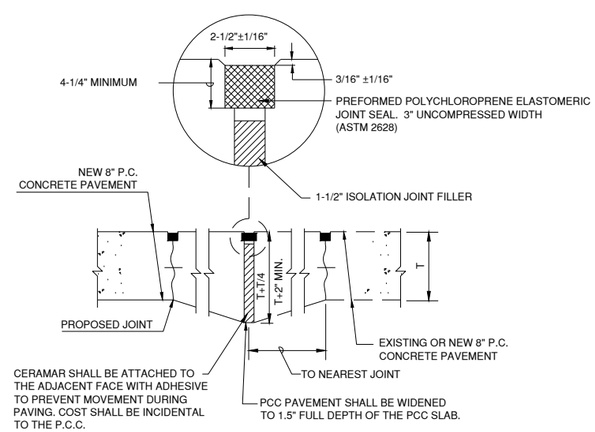

TYPE A THICKENED EDGE ISOLATION JOINT

SYMBOL —— A —— A ——

ISOLATION JOINTS

JOINT SEALANT NOTES:

1. FACTOR, W/D (WIDTH/DEPTH). FIELD POURED SEALANTS REQUIRE DIFFERENT SEALANT RESERVOIR TO PROVIDE PROPER SHAPE.
2. BACKER ROD AND PREMOLDED COMPRESSIBLE MATERIAL MUST BE COMPATIBLE WITH THE DESIRED SHAPE FACTOR. TYPE OF LIQUID SEALANT USED AND SIZED TO PROVIDE THE DESIRED SHAPE.
3. PLACE TOP OF BACKUP MATERIAL AS SHOWN TO CONFORM TO MANUFACTURER'S SHAPE FACTOR, SEALANT DEPTH ("D") IS MEASURED FROM THE HIGHEST SHAPE FACTORS FOR OPTIMUM PERFORMANCE. CONTRACTOR SHALL SUBMIT MFG. RECOMMENDATIONS ON JOINT RESERVOIR WITH SEALANT SUBMITTAL.
4. SEALING PROCEDURES SHALL BE IN ACCORDANCE WITH THE MANUFACTURER'S RECOMMENDATIONS.
5. ROUTING AND SEALING OF ALL BITUMINOUS AND PCC PAVEMENTS SHALL BE CONSIDERED INCIDENTAL TO THE CONCRETE PAVEMENT PAY ITEM.

CMT

CONSULTANTS

100% FINAL
JANUARY 12, 2024

REHAB AIRFIELD PAVEMENTS FED

DuPage Airport Authority

OWNER

DUPAGE AIRPORT
WEST CHICAGO, ILLINOIS

MARK	DATE	DESCRIPTION

AIP PROJ. NO.	
DPA 5065	
CMT PROJECT NO:	22004585.00
CAD DWG FILE:	22004585 - DPA - JOINTING DETAILS.DWG
DESIGNED BY:	AM
DRAWN BY:	JRO
CHECKED BY:	DKP
APPROVED BY:	DLP
COPYRIGHT:	

SHEET TITLE

PAVEMENT JOINTING DETAILS - 1

Path: K:\DupageAp\22004585.00_RehabAirfieldPavementsFED\Draw\Sheets\22004585 - dpa - jointing details.dwg
Date: Wednesday, January 31, 2024 11:24:12 AM

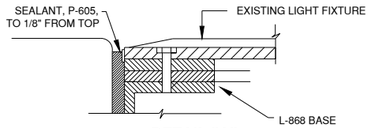

DETAIL "A"
NOT TO SCALE

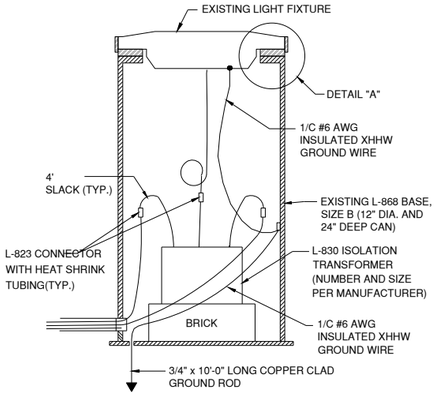

EXISTING IN-PAVEMENT LIGHT FIXTURE INSTALLATION DETAIL

NOT TO SCALE

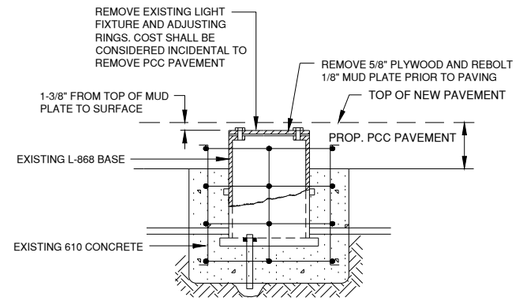

STEP 1

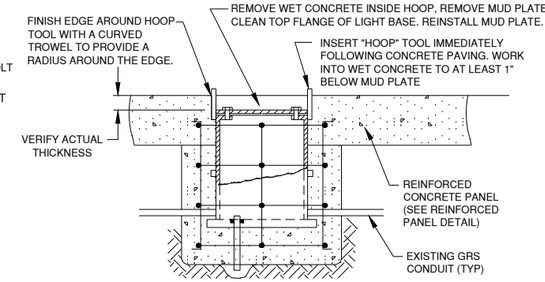

STEP 2

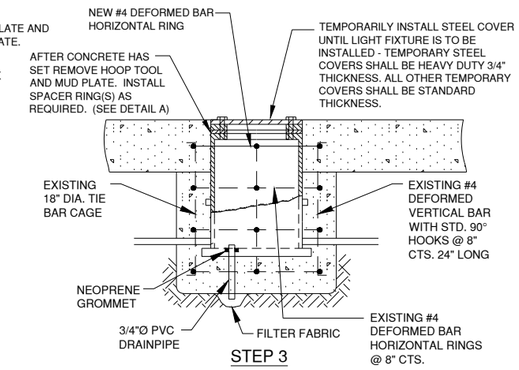

STEP 3

ADJUST IN-PAVEMENT LIGHT INSTALLATION IN PROPOSED PCC PAVEMENT

NOT TO SCALE

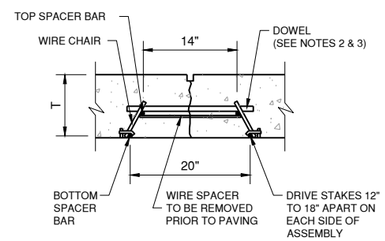

DOWEL BAR INSTALLATION DETAIL

NOT TO SCALE

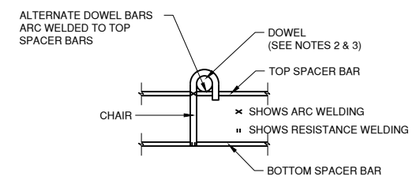

TYPICAL DOWEL BASKET ELEVATION DETAIL SHOWING CHAIR

NOT TO SCALE

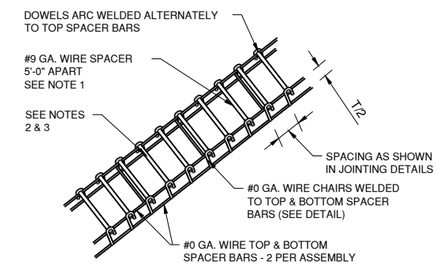

DOWEL BASKET ASSEMBLY DETAIL

NOT TO SCALE

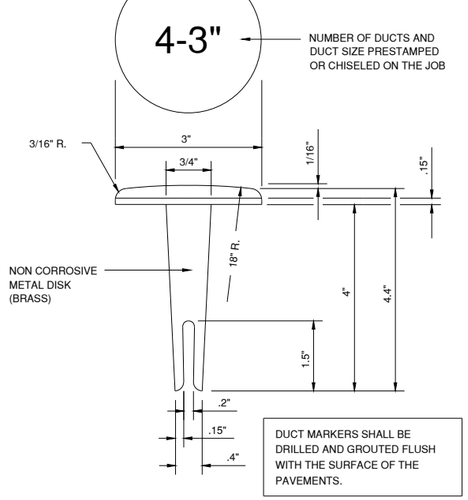

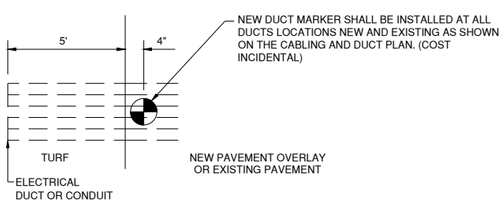

DUCT MARKER DETAIL

NOT TO SCALE

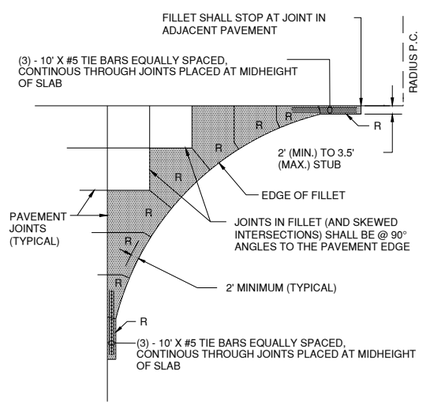

FILLET DETAIL AND FILLET REINFORCING LAYOUT

N.T.S.

(R) DENOTES ODD SHAPED REINFORCED PANELS TO BE REINFORCED WITH DEFORMED WIRE FABRIC AS SHOWN ON THIS SHEET. ALL NON RECTANGULAR SHAPED PANELS SHALL BE REINFORCED. (REINFORCEMENT NOT SHOWN)

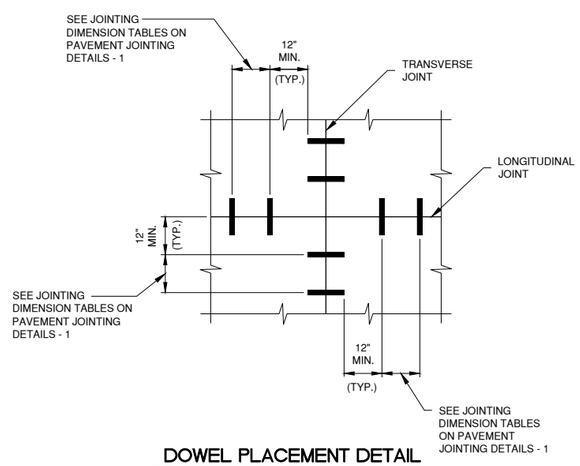

DOWEL PLACEMENT DETAIL

NOT TO SCALE

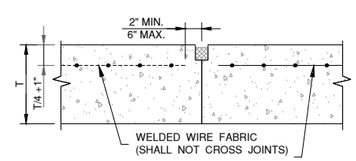

REINFORCED PANEL DETAIL

NOT TO SCALE

NOTE: SEE WIRE FABRIC NOTE 6

DOWEL BASKET NOTES

1. #9 GA. WIRE SPACER BAR ARC WELDED TO THE BOTTOM OF TOP SPACER BAR. (MAY BE MECHANICALLY ATTACHED IN LIEU OF WELDING) 3 REQUIRED PER UNIT. THIS WIRE MUST BE CUT OR REMOVED PRIOR TO PAVING.
2. DOWEL BAR DIAMETER, LENGTH & SPACING SHALL BE AS SHOWN IN TABLE 2 (PAVING DETAILS - 1 SHEET).
3. DOWELS SHALL BE EPOXY COATED FULL LENGTH OF DOWEL. IMMEDIATELY PRIOR TO PAVING, THE FREE END OF EACH DOWEL SHALL BE LUBRICATED OR OILED, FOR HALF THE LENGTH OF THE DOWEL.
4. T = PCC PAVEMENT THICKNESS

WIRE FABRIC NOTES:

1. PANELS TO BE REINFORCED WITH WIRE FABRIC DENOTED AS "R" ON THE JOINTING PLAN DRAWINGS.
2. WIRE FABRIC SHALL BE PLACED AT THE VERTICAL POSITION OF T/4 + 1" AS SHOWN.
3. WHEN A STRUCTURE IS LOCATED WITHIN A PANEL, WIRE FABRIC SHALL BE PLACED TO WITHIN 3" OF THE STRUCTURE.
4. MINIMUM WWF LAP IS 18 INCHES.
5. ALL WELDED WIRE FABRIC SHALL BE GRADE 60.
6. THE AREA OF WELDED WIRE FABRIC SHALL PROVIDE AT LEAST 0.05% OF REINFORCEMENT AREA TO UNIT CONCRETE AREA, ASSUMING GRADE 60 STEEL.

CMT

CONSULTANTS

100% FINAL
JANUARY 12, 2024

REHAB AIRFIELD PAVEMENTS
FED

DuPage Airport Authority

OWNER

DUPAGE AIRPORT
WEST CHICAGO, ILLINOIS

MARK	DATE	DESCRIPTION

AIP PROJ. NO.	
DPA 5065	
CMT PROJECT NO:	22004585.00
CAD DWG FILE:	22004585 - DPA - JOINTING DETAILS.DWG
DESIGNED BY:	AM
DRAWN BY:	JRO
CHECKED BY:	DKP
APPROVED BY:	DLP
COPYRIGHT:	

SHEET TITLE

PAVEMENT JOINTING DETAILS - 2

SHEET 18 OF 20

Path: K:\DupageAp\22004585.00_RehabAirfieldPavements\FED\Draw\Sheets\22004585 - dpa - jointing details.dwg
Date: Wednesday, January 31, 2024 11:24:13 AM

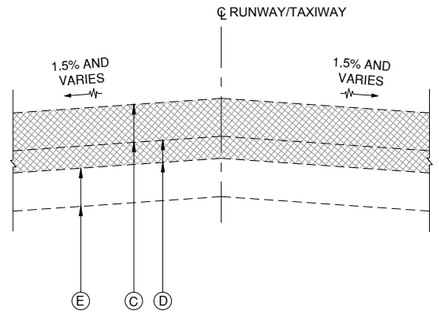

EXISTING PCC RUNWAY/TAXIWAY TYPICAL SECTION

NOT TO SCALE

LEGEND

- (A) NEW 8" PCC PAVEMENT (501)
- (B) NEW 4" CRUSHED AGGREGATE BASE COURSE (209)
- (C) EXISTING 8" PCC PAVEMENT TO BE REMOVED (501)
- (D) EXISTING 4" ASPHALT TREATED PERMEABLE SUBBASE TO BE REMOVED (152)
- (E) EXISTING 8" LIME MODIFIED SUBGRADE TO REMAIN UNDISTURBED
- (F) NEW 2" BITUMINOUS SURFACE COURSE (401)
- (G) NEW 2" BITUMINOUS BASE COURSE (403)
- (H) NEW BITUMINOUS TACK COAT (603)
- (I) EXISTING BITUMINOUS PAVEMENT TO BE MILLED 4" DEPTH (401)
- (J) EXISTING 8" PCC PAVEMENT
- (K) EXISTING 4" ASPHALT TREATED PERMEABLE SUBBASE

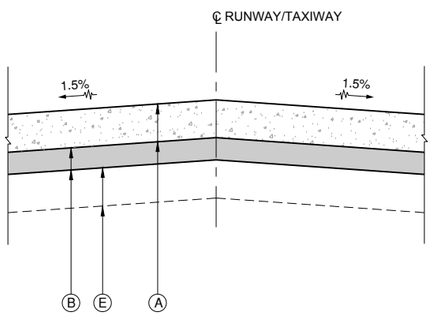

NEW PCC RUNWAY/TAXIWAY TYPICAL SECTION

NOT TO SCALE

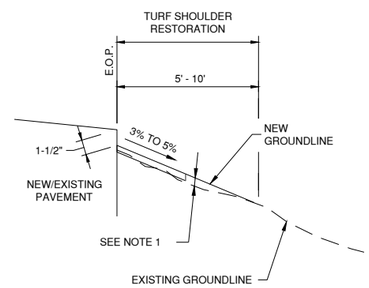

TURF SHOULDER DETAIL

NOT TO SCALE

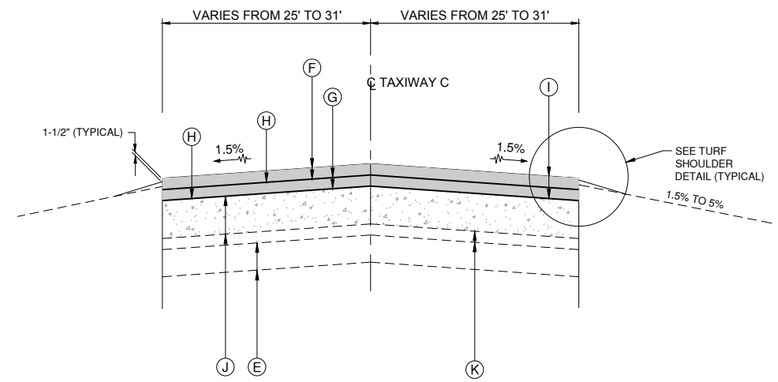

NEW BITUMINOUS TAXIWAY C TYPICAL SECTION

NOT TO SCALE

NOTES

1. TOPSOIL REQUIRED FOR FILL WILL VARY IN DEPTH.
2. LIMITS OF TURF SHOULDER SHALL BE ADJUSTED IN THE FIELD AS REQUIRED.
3. TURF RESTORATION SHALL BE INCIDENTAL TO THE CONTRACT.

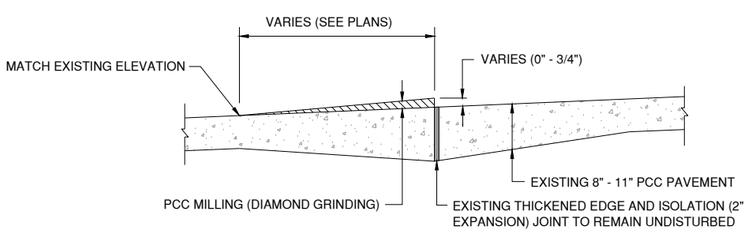

PCC MILLING (DIAMOND GRINDING) DETAIL

NOT TO SCALE

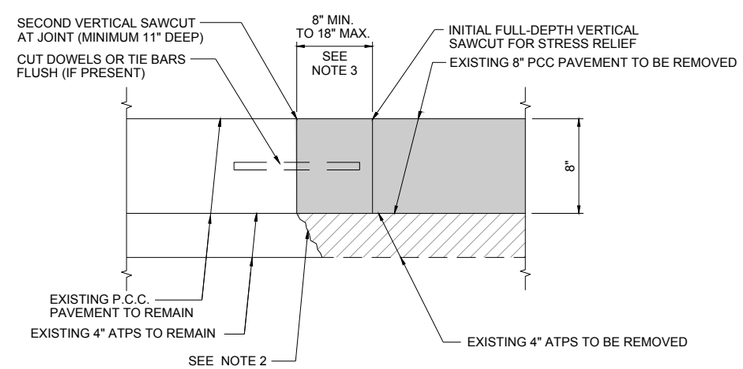

PCC - PCC PAVEMENT REMOVAL DETAIL

NOT TO SCALE

NOTES

1.) TWO VERTICAL FULL-DEPTH SAWCUTS SHALL BE MADE AS INDICATED PRIOR TO COMMENCEMENT OF ANY PAVEMENT DEMOLITION.

2.) CONTRACTOR SHALL TAKE ACTION AS NEEDED TO PREVENT LOSS OF BASE COURSE FROM UNDERNEATH PAVEMENT TO REMAIN IN PLACE. AGGREGATE LAYERS SHALL BE LAID BACK AT MAX. 1:1 SLOPE

3.) CONTRACTOR TO DETERMINE DISTANCE FROM JOINT FOR FIRST SAWCUT.

CMT

CONSULTANTS

100% FINAL
JANUARY 12, 2024

REHAB AIRFIELD PAVEMENTS
FED

DUPAGE AIRPORT AUTHORITY

OWNER

DUPAGE AIRPORT
WEST CHICAGO, ILLINOIS

MARK	DATE	DESCRIPTION

AIP PROJ. NO.	
DPA 5065	
CMT PROJECT NO:	22004585.00
CAD DWG FILE:	22004585 - DPA - TYPICAL SECTIONS.DWG
DESIGNED BY:	AM
DRAWN BY:	JRO
CHECKED BY:	DKP
APPROVED BY:	DLP
COPYRIGHT:	

SHEET TITLE

TYPICAL SECTIONS

Path: K:\DupageAp\22004585-00_RehabAirfieldPavementsFED\Draw\Sheets\22004585 - dpa - typical sections.dwg
Date: Wednesday, January 31, 2024 11:24:17 AM

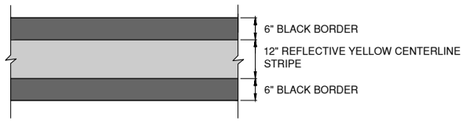

TAXIWAY CENTERLINE DETAIL

NOT TO SCALE

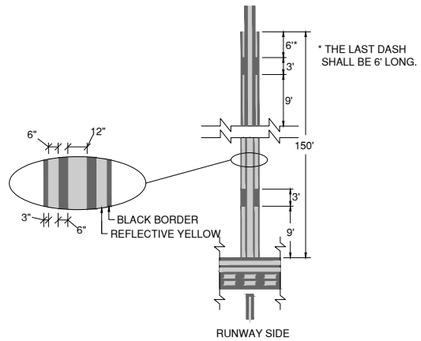

ENHANCED TAXIWAY CENTERLINE MARKING

NOT TO SCALE

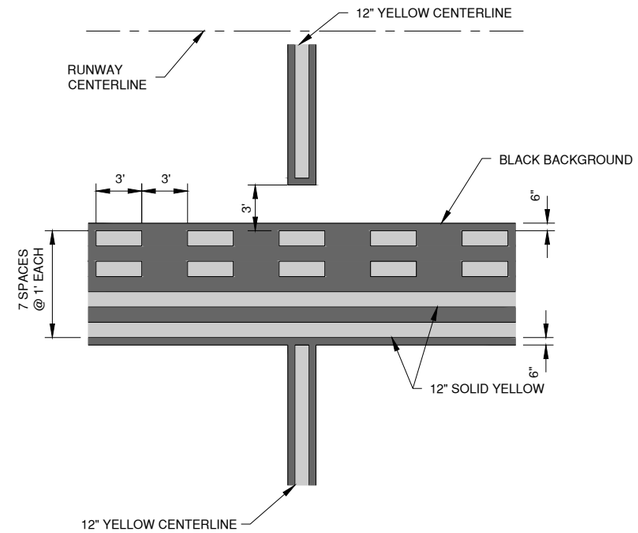

RUNWAY HOLDING POSITION MARKING

N.T.S.

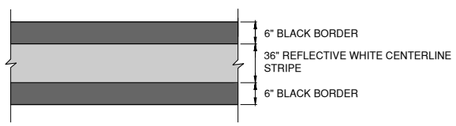

RUNWAY CENTERLINE DETAIL

NOT TO SCALE

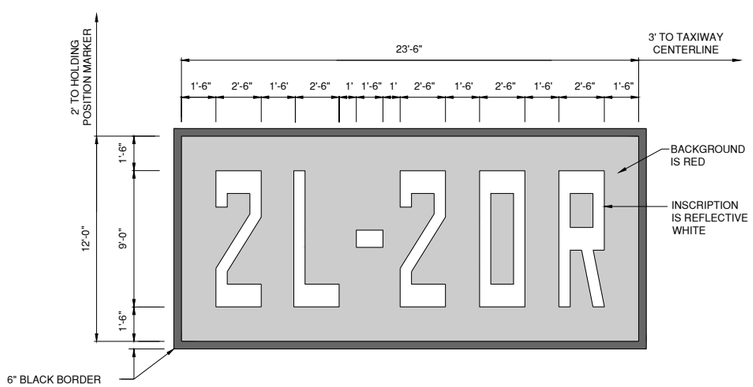

SURFACE PAINTED HOLDING POSITION SIGN

NO SCALE

NOTES

1. ALL SURFACE PAINTED HOLDING POSITION SIGNS SHALL HAVE A RED BACKGROUND WITH A WHITE INSCRIPTION, AND WILL BE OUTLINED WITH A 6" BLACK BORDER.
2. ALL LETTERS, NUMBERS AND SYMBOLS SHALL CONFORM TO FAA ADVISORY CIRCULAR 150/5340-1M (LATEST EDITION).

PAVEMENT MARKING NOTES

1. ALL TAXIWAY MARKINGS ARE REFLECTIVE YELLOW WITH A 6" BLACK BORDER UNLESS NOTED.
2. ALL RUNWAY MARKINGS ARE REFLECTIVE WHITE WITH A 6" BLACK BORDER UNLESS NOTED.
3. THE PAVEMENT SURFACE SHALL BE CLEAN AND DRY PRIOR TO MARKING.
4. WHEN YELLOW TAXIWAY STRIPING CROSSES ANY WHITE RUNWAY STRIPING, THE TAXIWAY STRIPE SHALL BE GAPPED 8" EACH SIDE OR RUNWAY STRIPE EXCEPT RUNWAY/RUNWAY HOLDLINES.
5. ALL LETTERS, NUMBERS AND SYMBOLS SHALL CONFORM TO FAA ADVISORY CIRCULAR 150/5340-1M (LATEST EDITION).
6. LOOSE PAINT TO BE REMOVED FROM PAVEMENT PRIOR TO REPLACEMENT OF EXISTING MARKING.

CMT

CONSULTANTS

100% FINAL
JANUARY 12, 2024

REHAB AIRFIELD PAVEMENTS
FED

DuPage Airport Authority

OWNER

DUPAGE AIRPORT
WEST CHICAGO, ILLINOIS

MARK	DATE	DESCRIPTION

AIP PROJ. NO.	
DPA 5065	
CMT PROJECT NO:	22004585.00
CAD DWG FILE:	22004585 - DPA - MARKING DETAILS.DWG
DESIGNED BY:	AM
DRAWN BY:	JRO
CHECKED BY:	DKP
APPROVED BY:	DLP
COPYRIGHT:	

SHEET TITLE

PAVEMENT MARKING DETAILS

SHEET 20 OF 20

Path: K:\DupageAp\22004585.00_RehabAirfieldPavements\FED\Draw\Sheets\22004585 - dpa - marking details.dwg
Date: Wednesday, January 31, 2024 11:24:21 AM