CONTRACT NO. 66407

F.A.I. RTE.	SECTION	COUNTY	TOTAL SHEETS	SHEET NO.
80	32-3HBR-1	GRUNDY	88	38
STA.		TO STA.		
FED. ROAD DIST. NO.	ILLINOIS	FED. AID PROJECT		

SHEET NO. B11 OF 35 SHEETS

STATE OF ILLINOIS
DEPARTMENT OF TRANSPORTATION

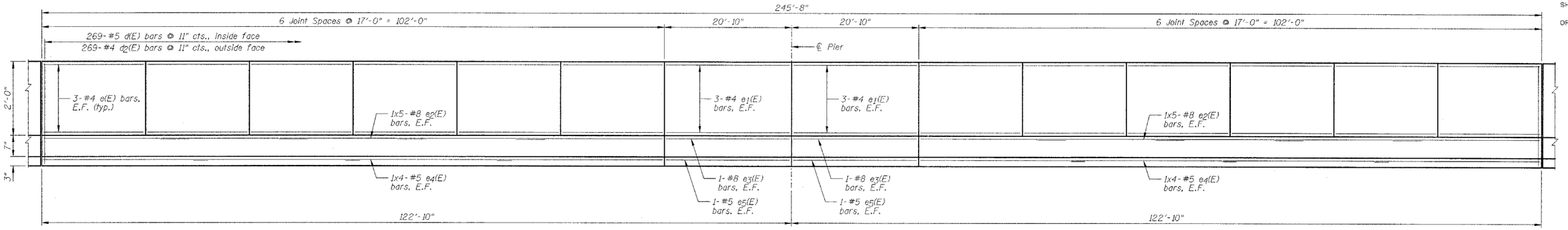

INSIDE ELEVATION OF PARAPET

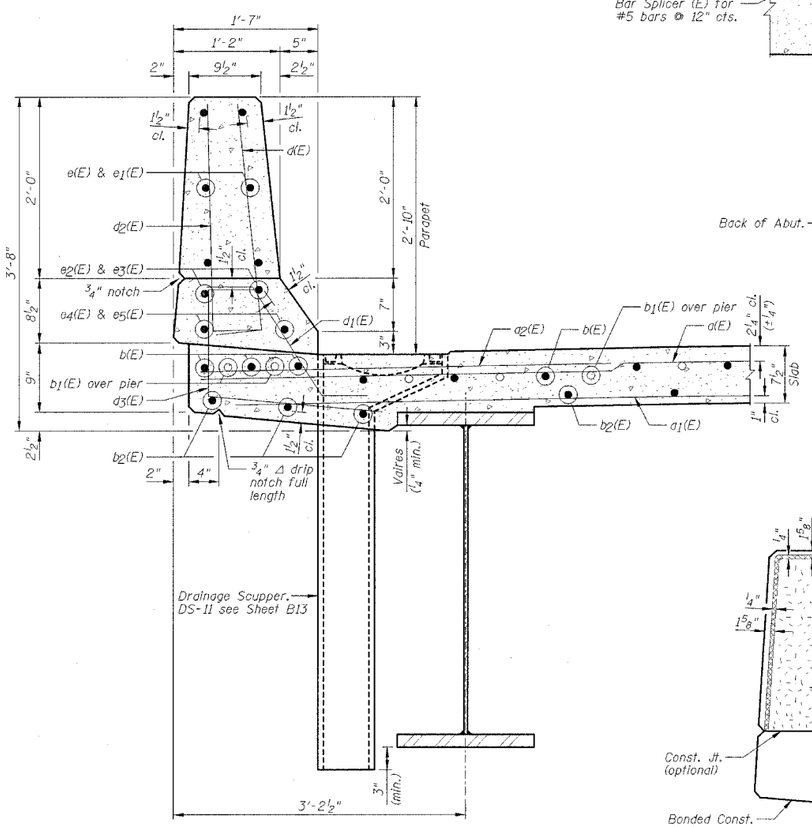

SECTION THRU PARAPET

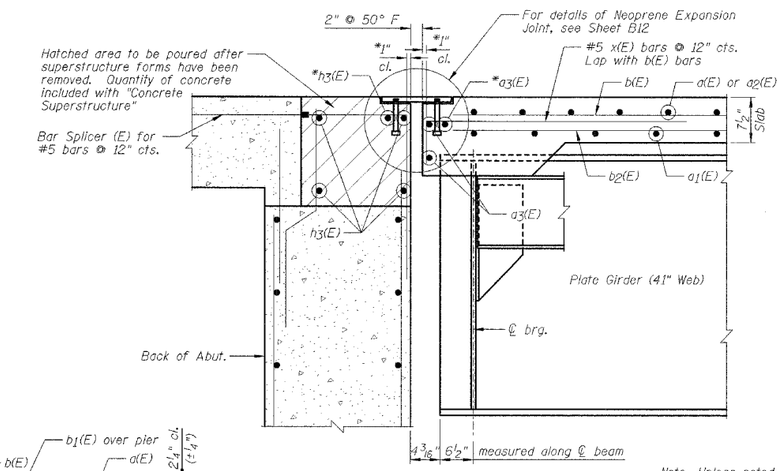

SECTION A-A

*Place a3(E) and h3(E) bars in back of anchor bolt as shown if required to maintain 1" cl. (+0-⅛"). Anchor bolts should be tied to a3(E) and h3(E) bars.

Note: Unless noted otherwise, dimensions are at right angles.

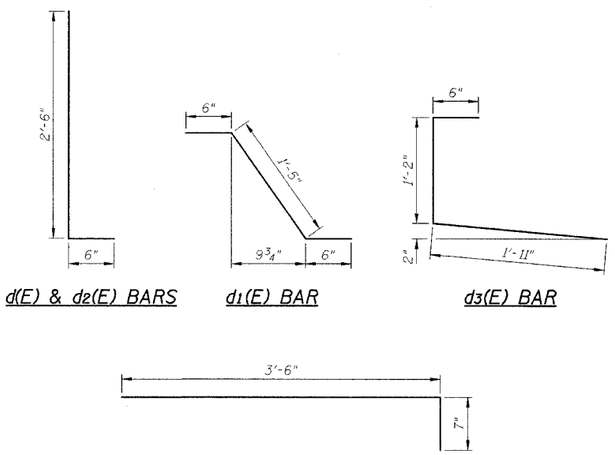

d(E) & d2(E) BARS — d1(E) BAR — d3(E) BAR — x(E) BAR

BAR LAP	
#5	2'-2"
#8	4'-6"

SUPERSTRUCTURE BILL OF MATERIAL

Bar	No.	Size	Length	Shape
a(E)	333	#5	34'-6"	
a1(E)	266	#5	33'-10"	
a2(E)	364	#6	4'-6"	
a3(E)	6	#5	39'-0"	
a4(E)	32	#5	2'-0"	
a5(E)	35	#5	34'-5"	
a6(E)	28	#5	34'-2"	
b(E)	342	#5	28'-9"	
b1(E)	105	#6	27'-4"	
b2(E)	310	#5	26'-1"	
d(E)	536	#5	3'-0"	
d1(E)	536	#5	2'-5"	
d2(E)	536	#4	3'-0"	
d3(E)	536	#4	3'-7"	
e(E)	144	#4	16'-8"	
e1(E)	24	#4	20'-6"	
e2(E)	40	#8	24'-0"	
e3(E)	8	#8	20'-6"	
e4(E)	32	#5	27'-1"	
e5(E)	8	#5	20'-6"	
h3(E)	10	#6	39'-1"	
x(E)	64	#5	4'-1"	

Item	Unit	Quantity
Reinforcement Bars, Epoxy Coated	Pound	61650
Concrete Superstructure	Cu Yd	280.1
Protective Coat	Sq Yd	1080
Bridge Deck Grooving	Sq Yd	816

BAR CUTTING DIAGRAM

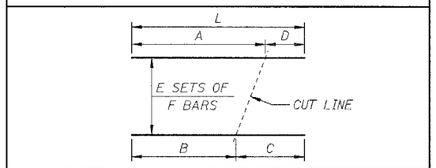

BAR	A	B	C	D	E	F	L
a5(E)	32'-11"	1'-6"	32'-11"	1'-6"	1	35	34'-5"
a6(E)	32'-8"	1'-6"	32'-8"	1'-6"	1	28	34'-2"

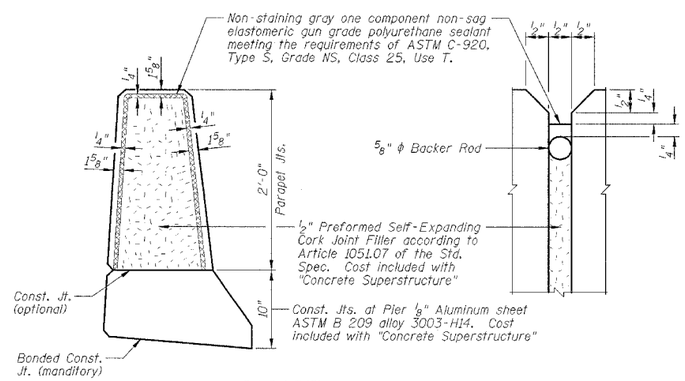

PARAPET JOINT DETAILS

NOTES:

1.) Work this sheet with Sheets B8-B10.
2.) E.F. denotes Each Face.
3.) Space drainage scuppers to miss stud shear connectors and reinforcing bars.
4.) Reinforcement bars designated (E) shall be epoxy coated.
5.) Bars indicated thus 1x4-#5 etc. indicates 1 line of bars with 4 lengths per line.
6.) Inside Elevation of Parapet view is exaggerated vertically to show reinforcement.

REVISIONS	
NAME	DATE

ILLINOIS DEPARTMENT OF TRANSPORTATION
SUPERSTRUCTURE DETAILS, PARAPET DETAILS AND BILL OF MATERIAL
F.A.I. 80 (I-80)
F.A.U. 5974 (ASHLEY ROAD) OVER I-80
SECTION 32-3HBR-1
GRUNDY COUNTY
STATION 110+00.00 STRUCTURE NO. 032-0113

DESIGNED BY: JML DRAWN BY: DJM
DATE: 09/09/05 CHECKED BY: MSW