STATE OF ILLINOIS
DEPARTMENT OF TRANSPORTATION

ROUTE NO.	SECTION	COUNTY	TOTAL SHEETS	SHEET NO.
FAS 1324	38 BR-1	IROQUOIS	29	11
FED. ROAD DIST. NO.		ILLINOIS	FED. AID PROJECT-	

SHEET NO. 3
7 SHEETS

Contract # 66564

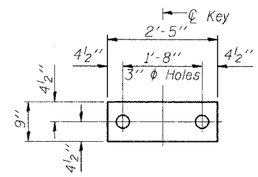

FABRIC BEARING PAD
(Interior)

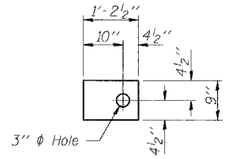

FABRIC BEARING PAD
(Exterior)

FIXED

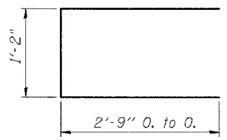

BAR U

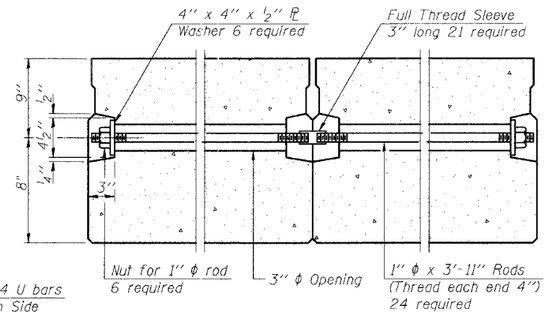

TYPICAL TRANSVERSE TIE ASSEMBLY

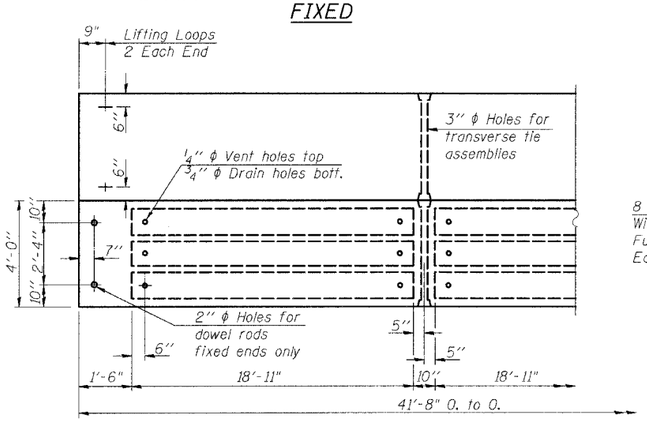

PLAN

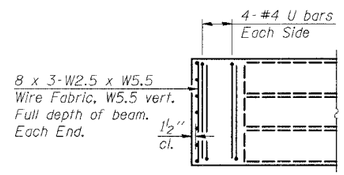

END PLAN

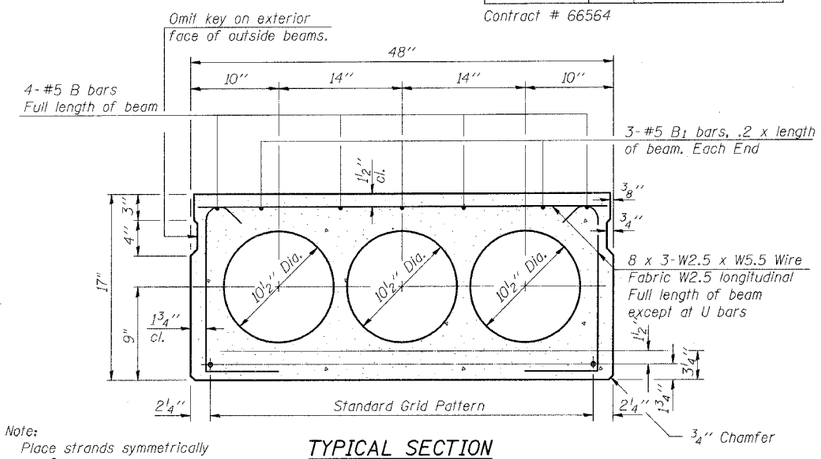

Note:
Place strands symmetrically about ℄ of beam.

TYPICAL SECTION

19 - ½" ϕ Strands, Each Strand Stressed to 30,900 Lbs.
13 - Strands 1¾" up, 4 - Strands 3¼" up, 2 - Strands 12" up.

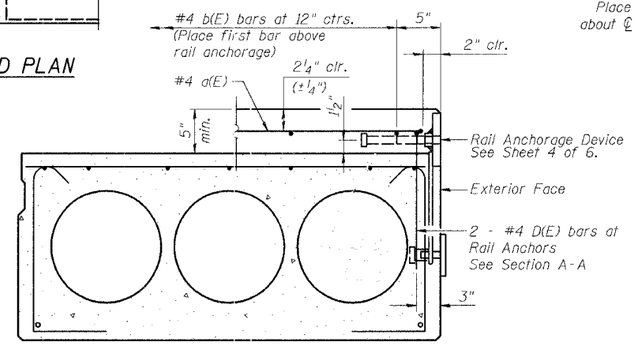

SECTION THRU EXTERIOR BEAMS AT RAIL ANCHORAGE

See Typical Section for strand pattern, dimensions and bar call outs.

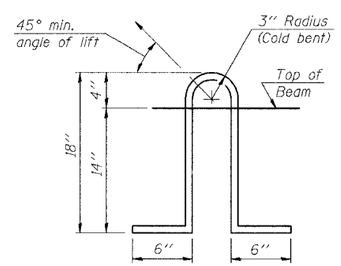

LIFTING LOOP DETAIL

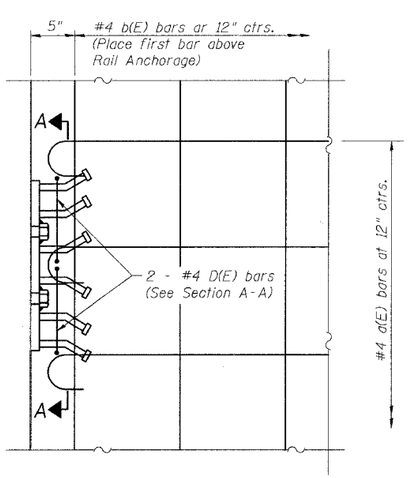

PLAN VIEW

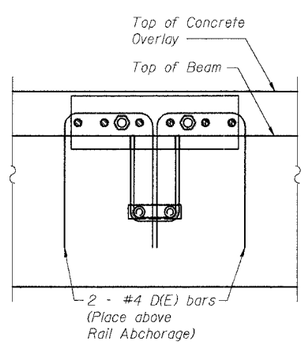

SECTION A-A

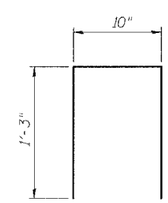

BAR D

The rail anchorage shall be cast with the beam and the wearing surface shall be cast in the field. Formwork necessary for the wearing surface may be secured utilizing the bottom rail anchorage inserts and/or additional inserts cast into the beam. Drilling into the beam will not be permitted.

NOTES

Prestressing steel shall be uncoated high strength, low relaxation 7-wire strand, Grade 270. The nominal diameter shall be ½" and the nominal cross-sectional area shall be 0.153 sq. in.

Lifting loops shall be 2-½" ϕ-270 ksi strands, as shown.

The 1" ϕ rods in the transverse tie assembly shall be tightened to a snug fit and the threads set. Pockets that receive transverse tie bar on outside shall be filled with grout after transverse tie assembly is in place.

Non prestressing steel shall conform to AASHTO M-31 or M-322 Grade 60.

The bearing seat surfaces shall be adjusted by shimming to assure firm and even bearing. Two ⅛" fabric adjusting shims of the dimensions of the Exterior Bearing Pad shall be provided for each bearing.

Keyway surfaces shall be cleaned to remove form oil or other bond breaking material prior to shipment of the beams. Cleaning shall be done by sandblasting the keyway areas between top of the beam and the bottom edge of the key.

Corrosion Inhibitor, as covered in the Special Provisions, shall be used in the concrete for precast prestressed concrete deck beams.

Required Release Strength, f'ci, shall be 4,000 p.s.i.

BILL OF MATERIAL

Bar	No.	Size	Length	Shape
Precast Prestressed Conc. Deck Bms. (17" Depth)			Sq. Ft.	4,000

REVISIONS	
NAME	DATE

ILLINOIS DEPARTMENT OF TRANSPORTATION

SUPERSTRUCTURE DETAILS

OLD US 45 OVER LANGAN CREEK
FAS ROUTE 1324 SECTION 38 BR-1
IROQUOIS COUNTY
STATION 558+74
S.N. 038-0185

SCALE: VERT. HORIZ.
DATE: */**/05
DRAWN BY: HEBERLING
DESIGNED BY: SANFORD
CHECKED BY: -

GREENE & BRADFORD, INC.
OF SPRINGFIELD
CONSULTING ENGINEERS
2333 CONSTITUTION DRIVE
SPRINGFIELD, ILLINOIS 62704
PROFESSIONAL DESIGN FIRM - 184-000579
PROFESSIONAL DESIGN STUDIO, ENGINEERING CORPORATION
(217) 793-5944, (217) 793-5027 (F), E-MAIL - design@greenebrdford.com

COMPUTER FILE NO. SN038-0185_SS2.dgn
PROJECT WO-10
03236

FILE NAME = J:\03236\WO10\DRAWINGS\sn038-0185\SN038-0185_SS2.dgn
PLOT SCALE = 1.0 ' / in.
PLOT DATE = 8/24/05 DRV = _PLOTTER_
PLOT TIME = 8:38:05 AM
OPERATOR = dgveh