ROUTE NO.	SECTION	COUNTY	TOTAL SHEETS	SHEET NO.
F.A.S. 555 C.H. 19	03-00181-00-BR	MACON	13	13
FED. ROAD DIST. NO.		ILLINOIS	PROJECT: BRS-555(205)	

CONTRACT NO. 91342

NOTES

1. The Backwall and the portion of the Wingwalls above the bonded construction joint shall be cast against the in-place beam.
2. 1" dia. x 2'-6" dowel rods in $1\frac{1}{2}$" dia. holes drilled in cap (2 each beam). Dowel rods to be grouted after beams are in place and allowed to cure (min. 24 hrs.) prior to grouting the shear keys. The grout shall be an approved non-shrink grout.
3. Reinforcement bars designated (E) shall be Epoxy Coated.
4. Reinforcement bars shall conform to the requirements of A.A.S.H.T.O. M-31 or M-322, Grade 60
5. Space reinforcement in cap to miss anchor bolts.

DESIGN STRESSES

f'_c = 3,500 psi

f_y = 60,000 psi

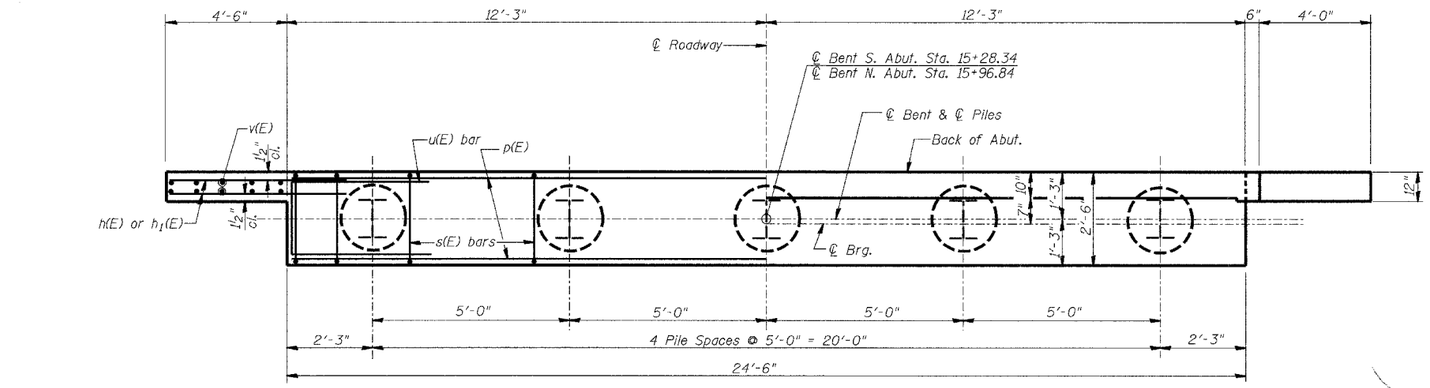

PLAN

PILE DATA

Type: Steel HP8X36
Capacity: 41 Tons (Overdrive to 62 Tons)
Estimated Length: 28'-0" South Abutment
27'-0" North Abutment
No. Required: South Abutment - 4 Plus 1 Permanent Test Pile
North Abutment - 5

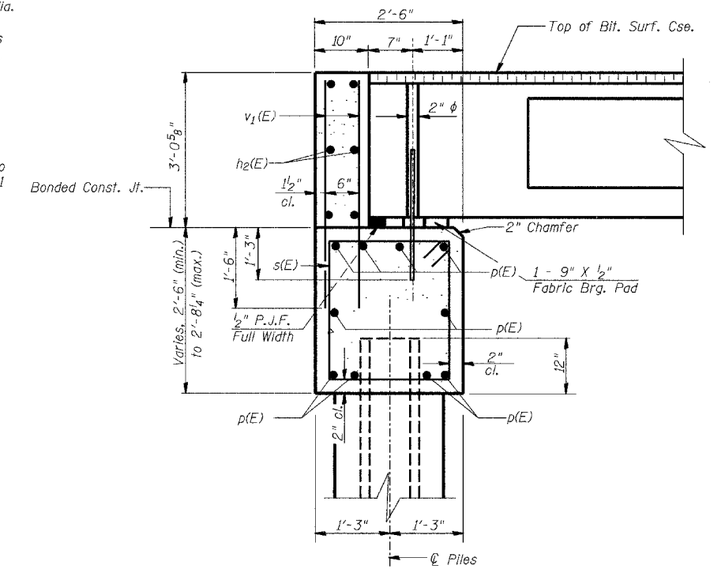

SECTION THRU ABUT.

(At Rt. Angles)

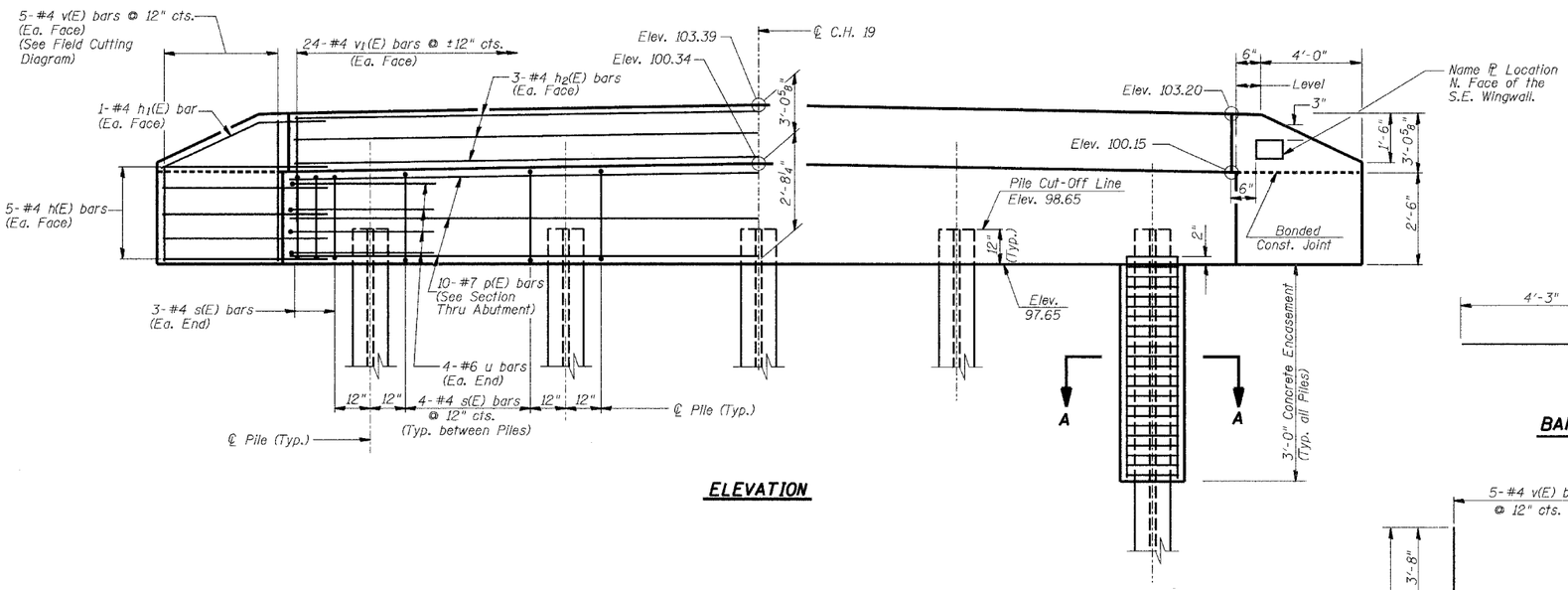

ELEVATION

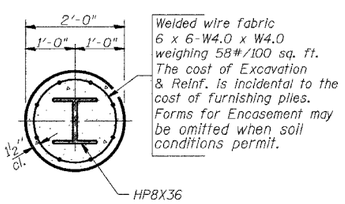

SECTION A-A

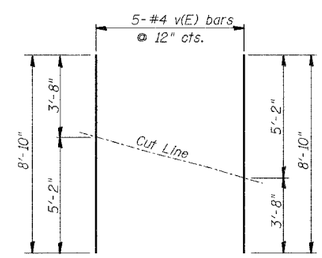

FIELD CUTTING DIAGRAM

Order bars full length. Cut to fit as shown and use remainder of bars in other face.

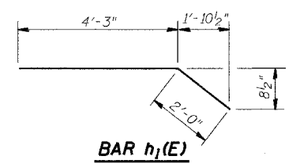

BAR h_1(E)

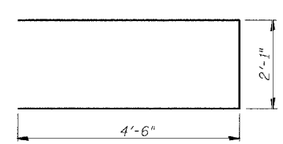

BAR u(E)

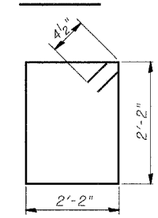

BAR s(E)

BILL OF MATERIAL
SOUTH AND NORTH ABUTMENTS

Bar	No.	Size	Length	Shape
h(E)	40	#4	6'-0"	
h_1(E)	8	#4	6'-3"	
h_2(E)	12	#4	24'-2"	
p(E)	20	#7	24'-2"	
s(E)	44	#4	9'-5"	
u(E)	16	#6	11'-1"	
v(E)	20	#4	8'-10"	
v_1(E)	96	#4	4'-5"	
Concrete Structures			Cu. Yd.	19.6
Concrete Encasement			Cu. Yd.	3.4
Reinforcement Bars, Epoxy Coated			Pound	2320
Steel Piles HP8X36			Foot	247
Test Pile Steel HP8X36			Each	1

SOUTH AND NORTH ABUTMENTS

Date	Designed MJP	C.H. 19 OVER WILLOW BRANCH SECTION 03-00181-00-BR MACON COUNTY STA. 15+62.59 PROP. STR. NO. 058-3368
Revisions	Drawn MJP	
	Checked KWB	
	Approved KWB	

Sheet No. 4 of 4

Prepared by: URS 3040 North University Avenue Decatur, Il. 62526

URS Job No. 36431468