F.A.S.	SECTION	COUNTY	TOTAL SHEETS	SHEET NO.
813	02-00057-00-RS	EDWARDS	4	3
FED. ROAD DIST. NO. 7	ILLINOIS	BONEGAP ROAD (NORTH)		

LEC JOB # H94ILD19ED

CONTRACT NO. 95447

DETAILS OF SURFACING AT INTERSECTIONS AND SIDEROADS

DETAIL OF TAPER STA. 0+00 TO STA 0+50

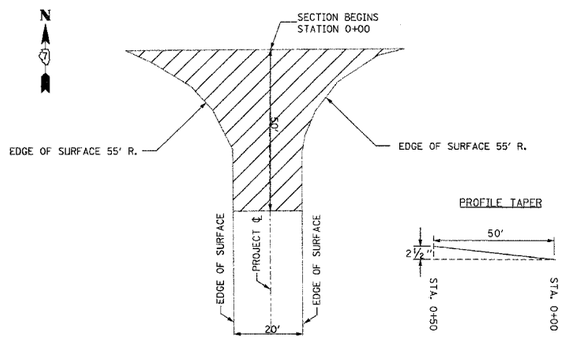

NOTE: THE QUANTITY SHOWN FOR BITUMINOUS CONCRETE SURFACE COURSE, SUPERPAVE, MIX "C", N50 INCLUDES 23.4 TONS OF MATERIAL FOR THE TAPER FROM STATION 0+0 TO STATION 0+50.

DETAIL OF INTERSECTION RT. STA. 26+67

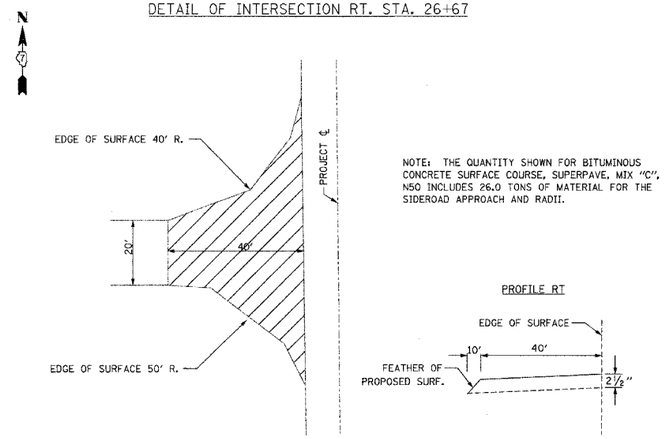

NOTE: THE QUANTITY SHOWN FOR BITUMINOUS CONCRETE SURFACE COURSE, SUPERPAVE, MIX "C", N50 INCLUDES 26.0 TONS OF MATERIAL FOR THE SIDEROAD APPROACH AND RADII.

DETAIL OF INTERSECTION RT. & LT. STA. 53+43

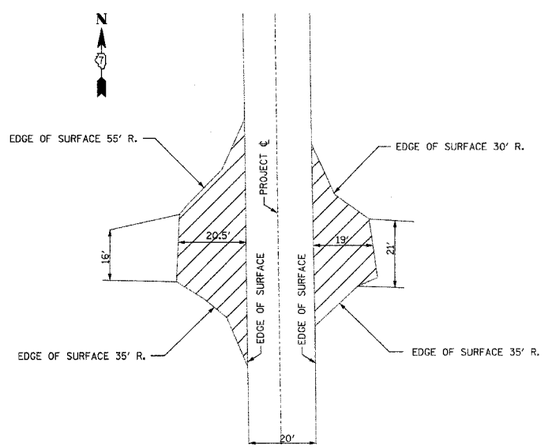

NOTE: THE QUANTITY SHOWN FOR BITUMINOUS CONCRETE SURFACE COURSE, SUPERPAVE, MIX "C", N50 INCLUDES 9.4 TONS OF MATERIAL FOR THE SIDEROAD LT APPROACH AND RADII AND 13.8 TONS OF MATERIAL FOR THE SIDEROAD RT. APPROACH AND RADII.

PROFILE RT

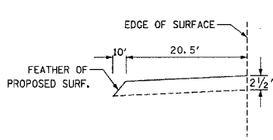

PROFILE LT

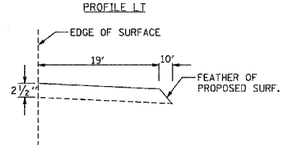

DETAIL OF INTERSECTION RT. & LT. STA. 80+00

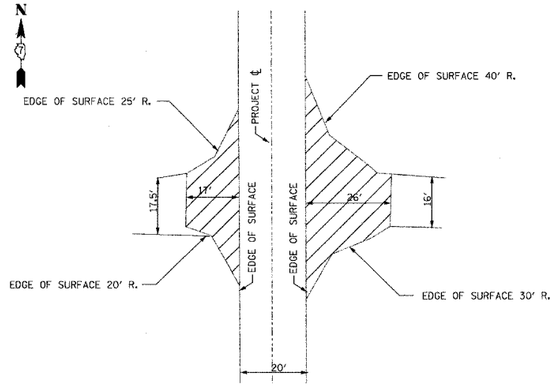

NOTE: THE QUANTITY SHOWN FOR BITUMINOUS CONCRETE SURFACE COURSE, SUPERPAVE, MIX "C", N50 INCLUDES 13.8 TONS OF MATERIAL FOR THE SIDEROAD LT APPROACH AND RADII AND 7.6 TONS OF MATERIAL FOR THE SIDEROAD RT. APPROACH AND RADII.

PROFILE RT

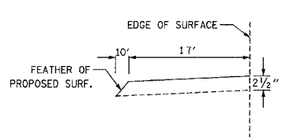

PROFILE LT

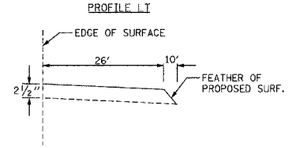

DETAIL OF INTERSECTION RT. & LT. STA. 106+77

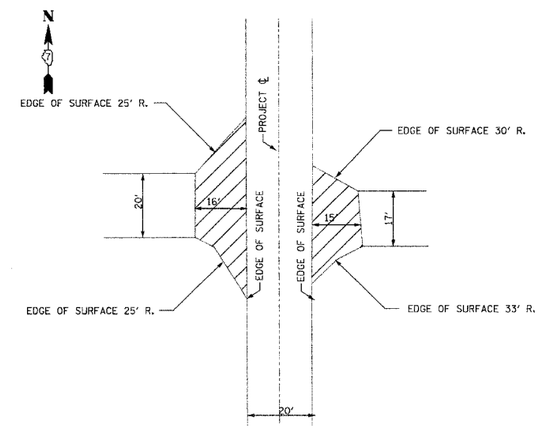

NOTE: THE QUANTITY SHOWN FOR BITUMINOUS CONCRETE SURFACE COURSE, SUPERPAVE, MIX "C", N50 INCLUDES 6.0 TONS OF MATERIAL FOR THE SIDEROAD LT APPROACH AND RADII AND 8.9 TONS OF MATERIAL FOR THE SIDEROAD RT. APPROACH AND RADII.

PROFILE RT

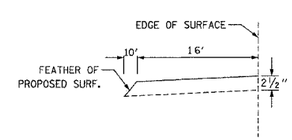

PROFILE LT

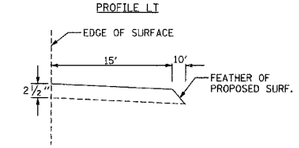

323 W. 3RD ST.
P.O. BOX 160
MT. CARMEL, IL
62863
PHONE:
(618)-262-8651
FAX:
(618)-263-3327

405 W. STATE ST.
SUITE1
PRINCETON, IN
47670
PHONE:
(812)-386-7611
FAX:
(812)-385-2812

LAMAC ENGINEERING CO.

PROFESSIONAL
DESIGN FIRM
LAND SURVEY &
PROFESSIONAL
ENGINEERING
CORPORATION
184-000887
(62-030435)(184-000789)

MICHAEL L. GILL
REGISTERED
PROFESSIONAL
ENGINEER
OF
32435
ILLINOIS

MICHAEL L. GILL
~~DUSTIN R. BUNTING~~
NAME

SIGNATURE

10-27-05
DATE

11-30-05
EXPIRES