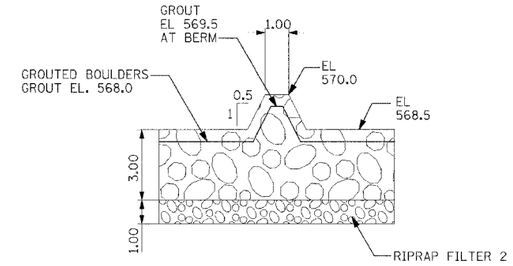

SECTION I-I

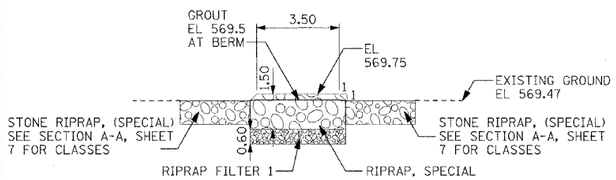

SECTION G-G

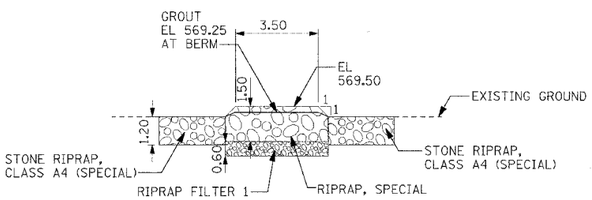

SECTION H-H

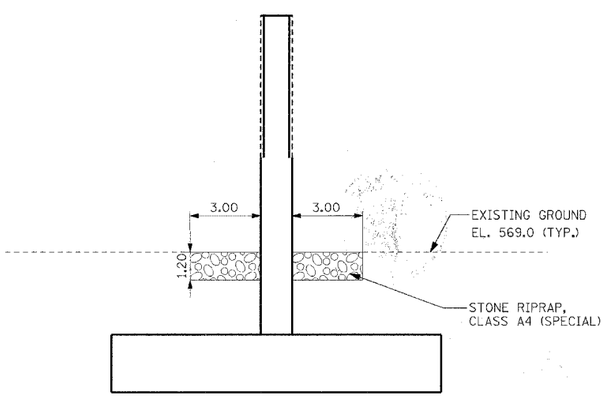

SECTION R-R

0 5' 10' — 1"= 3'

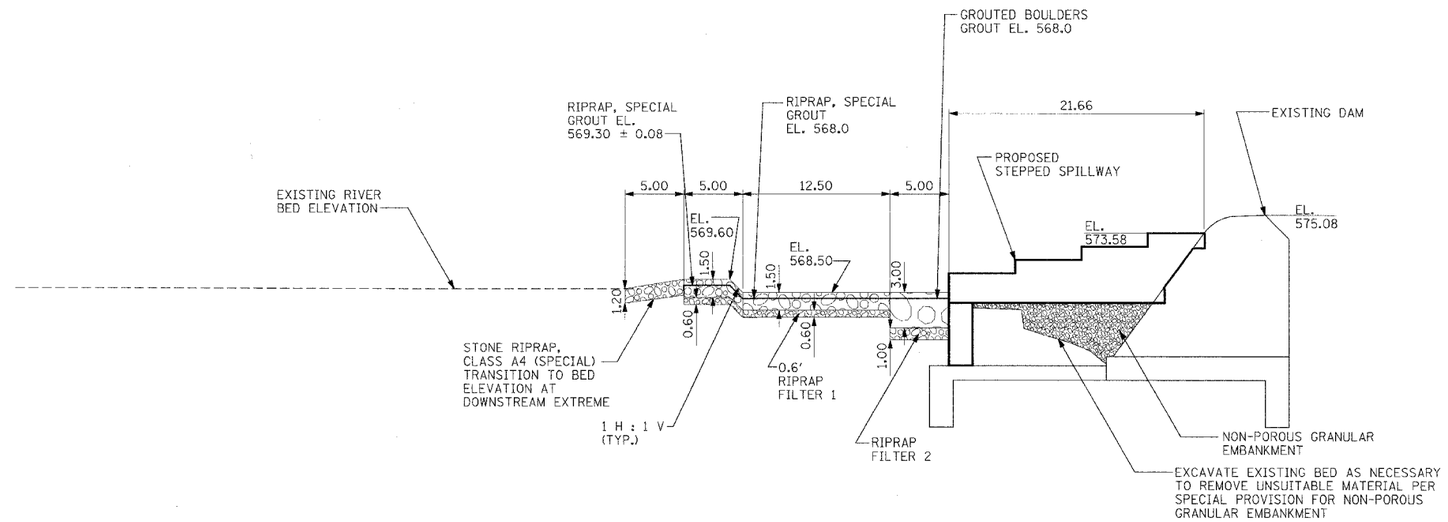

SECTION E-E

0 10' 20' — 1"= 6'

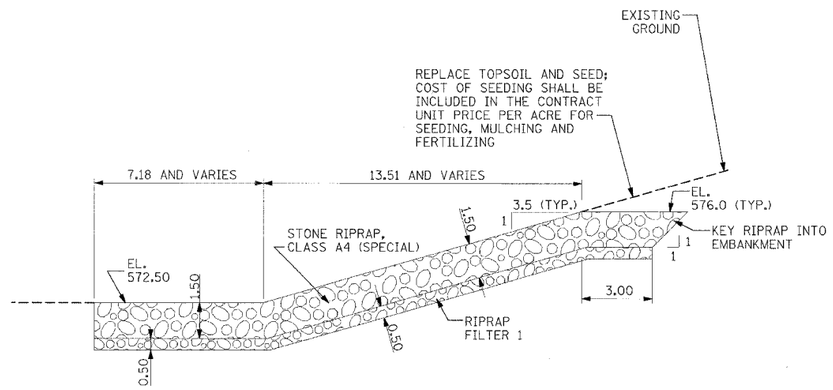

SECTION Q-Q

0 5' 10' — 1"= 3'

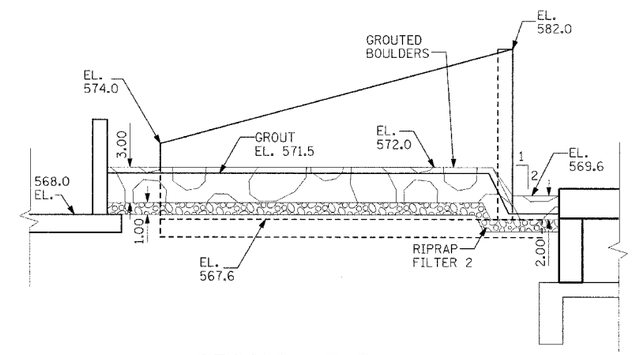

SECTION S-S

0 10' 20' — 1"= 6'

NOTE:
1. EXCAVATION FOR RIPRAP SHALL BE TO THE INDICATED DEPTHS, OR TO FIRM BEDROCK IF ENCOUNTERED AT A HIGHER ELEVATION
2. RIPRAP FILTER IS NOT REQUIRED UNDER STONE RIPRAP, (SPECIAL) WHEN PLACED ON FIRM BEDROCK
3. GROUTED BOULDERS AND RIPRAP, SPECIAL REQUIRE RIPRAP FILTER AT ALL LOCATIONS.
4. RIPRAP FILTER(S) ARE NOT REQUIRED UNDER STONE RIPRAP CLASS A4 (SPECIAL) WHEN PLACED ON AN IN SITU BEDDING MATERIAL THAT IS A POROUS MATERIAL WITH SIMILARLY SIZED MATERIAL OR WHEN PLACED DIRECTLY ON FIRM BEDROCK.

FR-422

TENG
TENG & ASSOCIATES, INC.
ENGINEERS/ARCHITECTS/PLANNERS
205 N. MICHIGAN AVE., CHICAGO, IL 60601
TELEPHONE: 312/616-0000

Designed By MD Checked By RUM
Drawn By MD Checked By RUM
User: untitled
10/17/2005 05:23:07 PM H:\DwrProjImpl\Projects\Yorkville Sheet Fixes\v8 xsc00oyb.dgn