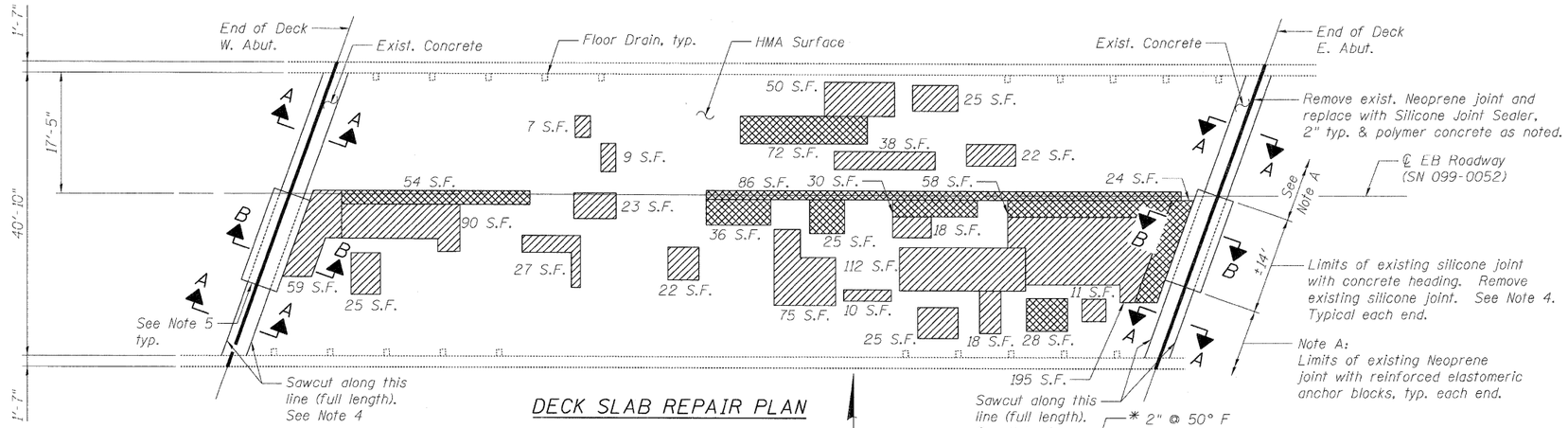

DECK SLAB REPAIR PLAN

N

LEGEND

- Deck Slab Repair (Partial Depth)
- Deck Slab Repair (Full Depth, Type II)

NOTES

1. Removal of the existing silicone and Neoprene joint shall be included in the cost of Polymer Concrete. Existing studs to remain.
2. Contractor shall remove the existing asphalt overlay, and as necessary, adjust the milling depth to prevent damage to the existing waterproofing membrane. See Special Provision Hot-Mix Asphalt Surface Removal (Deck).
3. For existing concrete patches throughout the deck or approach slabs, the Contractor shall grind off the existing concrete patch flush with the existing top of deck/approach slab. This work shall be included in the cost of Hot-Mix Asphalt Surface Removal (Deck).
4. Existing concrete surface to remain. Areas that require repair will be paid for as Deck Slab Repair (Full Depth, Type II). Sawcut edge to provide a uniform width in addition to a clean edge for HMA surface and/or polymer concrete. Cost of sawcut and concrete removal shall be included in the cost of Hot-Mix Asphalt Surface Removal (Deck).
5. Prepare existing concrete to provide a clean edge for polymer concrete, which may include removal of existing concrete heading as necessary. Cost of this work shall be included in the cost of Polymer Concrete.
6. Contractor may remove and replace guardrail components to facilitate joint replacement work. Cost included with Silicone Joint Sealer, 2".
7. The deck slab repair concrete shall be placed to match the top of the existing waterproofing system adjacent to the repair area.
8. After completion of the deck slab repair work, the HMA surface course shall be placed in sufficient thickness in order to match the original surface elevation.

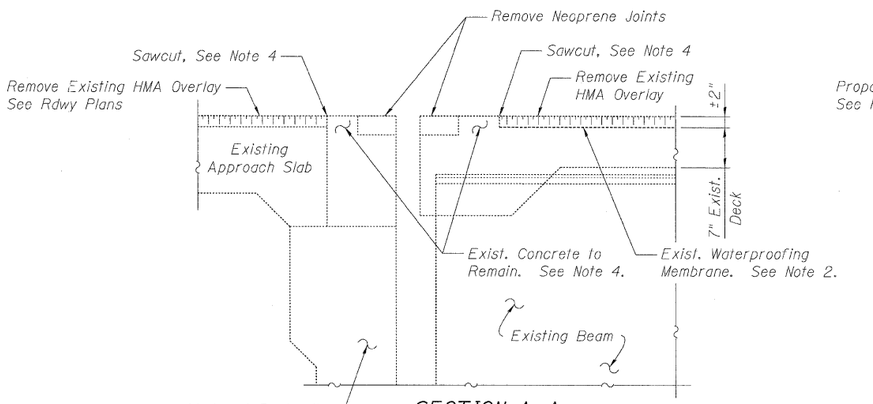

SECTION A-A

Existing Conditions
Dimensions are at Rt. Ls to ℄ Abut.

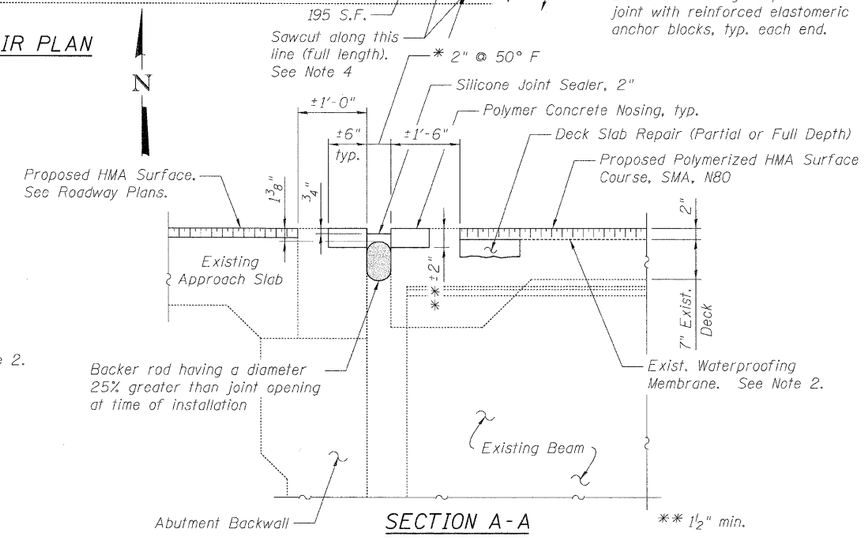

SECTION A-A

Proposed Conditions
Dimensions are at Rt. Ls to ℄ Abut.
* Match existing opening

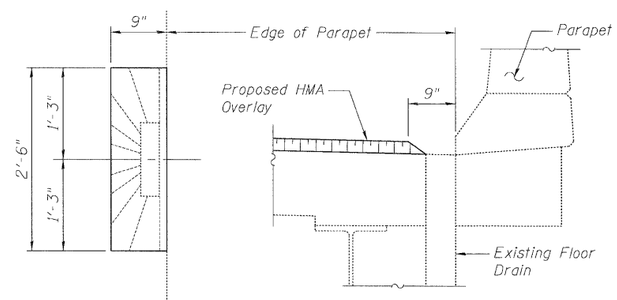

TOP PLAN

SECTION AT FLOOR DRAIN

HMA OVERLAY AT FLOOR DRAIN

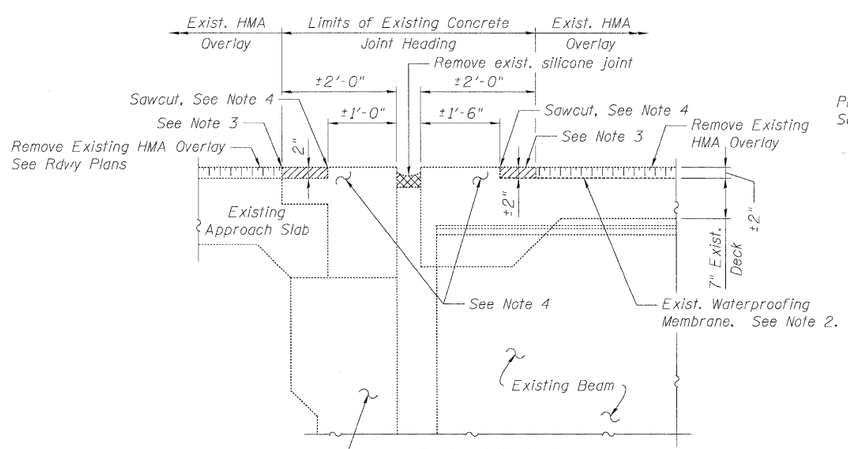

SECTION B-B

Existing Conditions
Dimensions are at Rt. Ls to ℄ Abut.

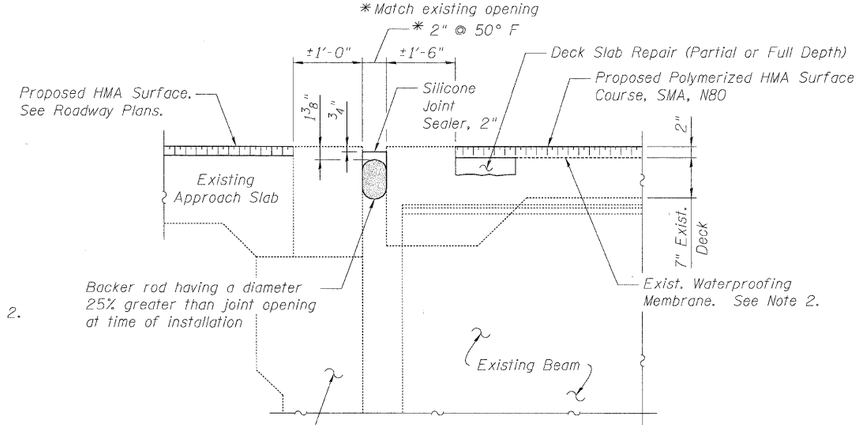

SECTION B-B

Proposed Conditions
Dimensions are at Rt. Ls to ℄ Abut.
* Match existing opening

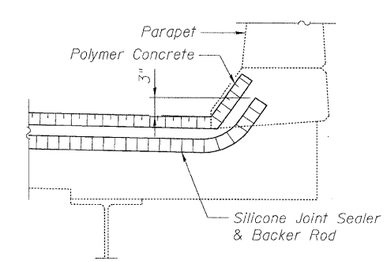

DETAIL FOR PARAPET TREATMENT

	DESIGNED - DF	REVISED -	
USER NAME = lmjeller	DRAWN - LAM	REVISED -	
PLOT SCALE = NTS	CHECKED - BLU	REVISED -	
PLOT DATE = 1/20/2011 12:33:43 PM	DATE - 01/21/2011	REVISED -	

HBP Illinois Partners

STATE OF ILLINOIS
DEPARTMENT OF TRANSPORTATION

DECK AND JOINT REPAIR DETAILS
EASTBOUND FAI-80 OVER CENTER STREET RAMP AA
STRUCTURE NO. 099-0052

SHEET NO. S-3 OF S-6 SHEETS

F.A.I RTE.	SECTION	COUNTY	TOTAL SHEETS	SHEET NO.
80	99(2&3)RS-3	WILL	200	99
		CONTRACT NO. 60M64		
FED. ROAD DIST. NO.	ILLINOIS	FED. AID PROJECT		

S:\0568\05_CADD\CADD Sheets\0990052-60M64-003-RPR.dgn