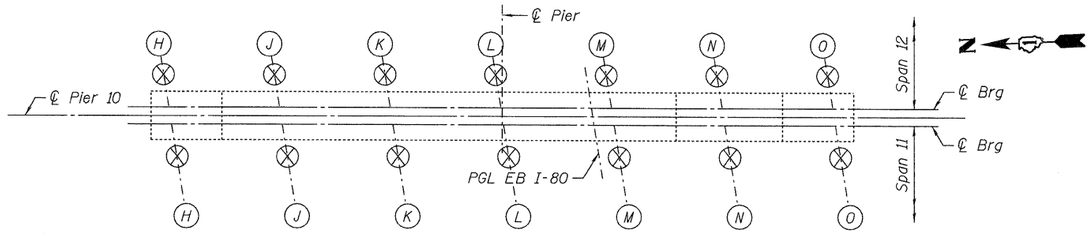


## TEMPORARY SHORING PLAN
## PIER 10

⊗ Temporary Support

## TEMPORARY SUPPORT INTERIOR BEAM REACTIONS

| REACTION | SPAN 11 | SPAN 12 |
|---|---|---|
| Dead Load | 48 | 41 |
| Live Load + Impact | 52 | 50 |
| Total | 100 | 91 |

Contractor to design shoring system for dead load plus live load plus impact.

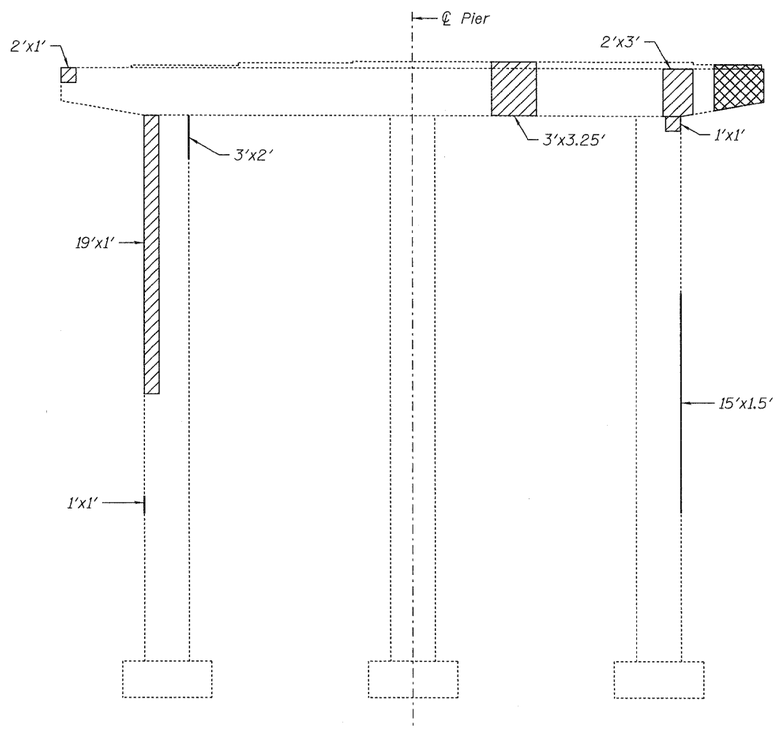


## WEST ELEVATION
Looking East

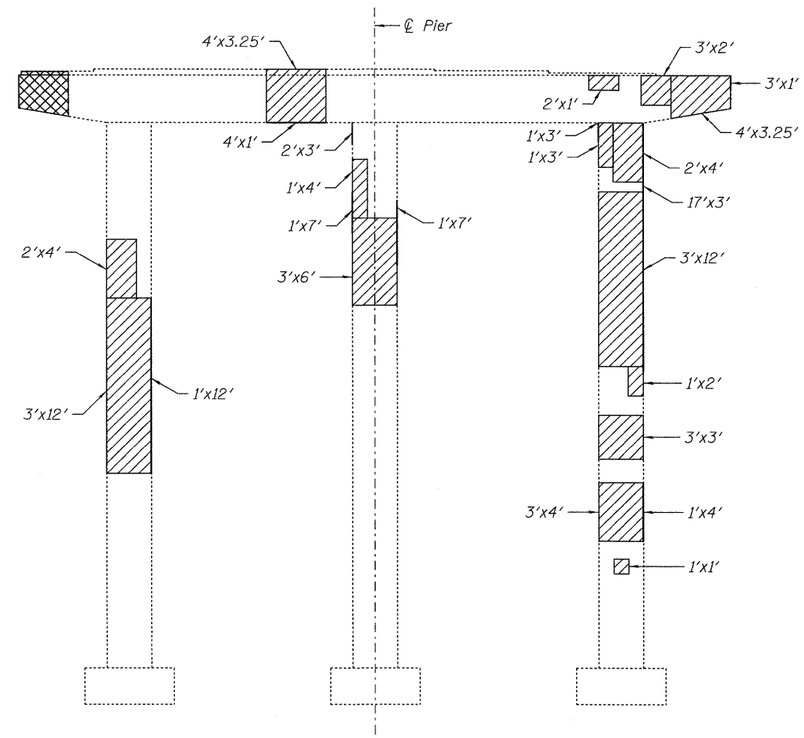


## EAST ELEVATION
Looking West

## NOTES:

1. Areas of proposed pier repairs are estimated. Actual type, location and dimensions of pier repairs are to be determined by the Engineer during construction.
2. Temporary Shoring and Cribbing is required for pier repairs.

## BILL OF MATERIAL

| ITEM | UNIT | TOTAL |
|---|---|---|
| Structural Repair Of Concrete (Depth Greater Than 5 Inches) | Sq.Ft. | 196 |
| Structural Repair Of Concrete (Depth Equal To Or Less Than 5 Inches) | Sq.Ft. | 139 |
| Temporary Shoring and Cribbing | Each | 14 |
| | | |

## LEGEND:

Spalled or unsound concrete

Remove and replace
See Sheet S-12 of 15 for details.

| | | |
|---|---|---|
| | DESIGNED - PCA | REVISED - |
| USER NAME = lsupancheck | DRAWN - LK | REVISED - |
| PLOT SCALE = 1:1 | CHECKED - MEA | REVISED - |
| PLOT DATE = 20-JAN-2011 | DATE - 01/21/2011 | REVISED - |

FILE NAME = IP_PlvPzdms34575\0990060-60M64-010-PIER.DGN

HBP Illinois Partners

**STATE OF ILLINOIS**
**DEPARTMENT OF TRANSPORTATION**

**PIER 10 REPAIRS**
**EASTBOUND FAI-80 OVER RAILROAD/GARDNER STREET**
**STRUCTURE NO. 099-0060**

SHEET NO. S-10 OF 15 SHEETS

| F.A.I. RTE. | SECTION | COUNTY | TOTAL SHEETS | SHEET NO. |
|---|---|---|---|---|
| 80 | 99 (2&3) RS-3 | WILL | 200 | 158 |
| | | CONTRACT NO. 60M64 | | |

FED. ROAD DIST. NO. 1 | ILLINOIS | FED. AID PROJECT