SECTION 24, TOWNSHIP 38, RANGE 12
SECTION 25, TOWNSHIP 38, RANGE 12

PLAN		BY	DATE
NOTE BOOK NO.	SURVEYED / PLOTTED / ALIGNMENT CHECKED / RT. OF WAY CHECKED / CADD FILE NAME		

PROFILE		BY	DATE
NOTE BOOK	SURVEYED / PLOTTED / GRADES CHECKED / B.M. NOTED		

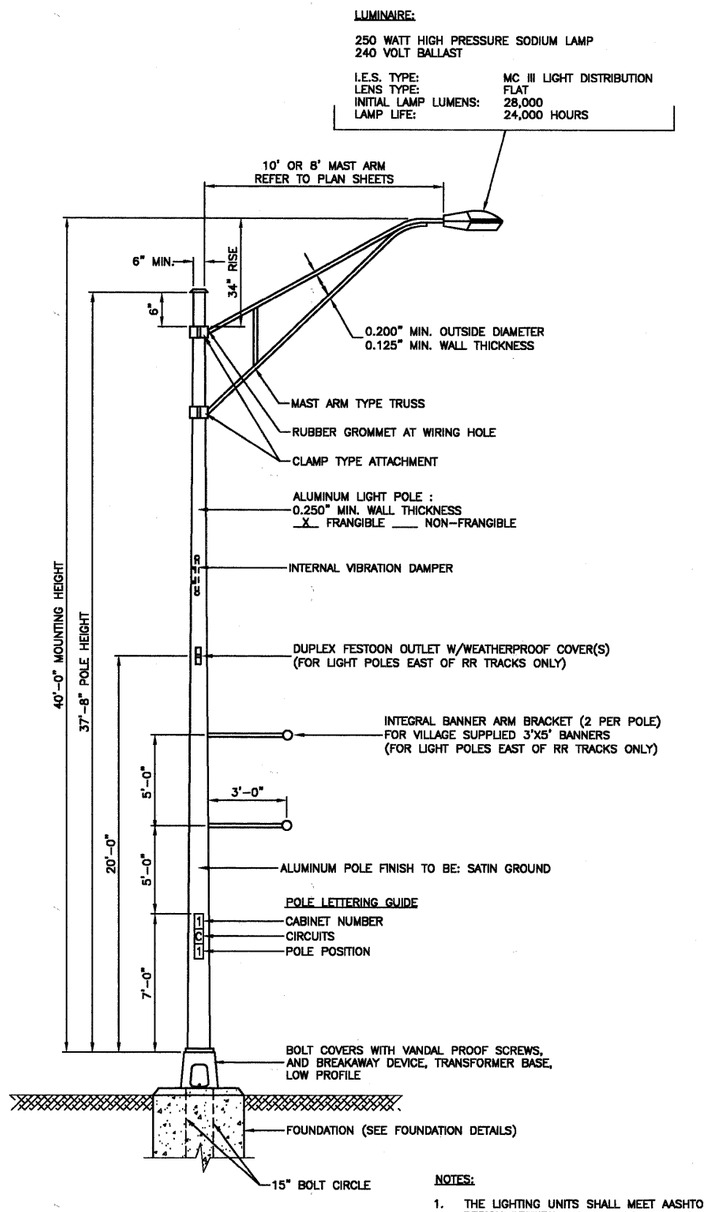

TYPICAL POLE INSTALLATION (40' MH)

NOTES:

1. THE LIGHTING UNITS SHALL MEET AASHTO DESIGN CRITERIA. DESIGN FOR 90 M.P.H. WIND WITH 30% GUST AND 75 POUND LUMINAIRE HAVING AN E.P.A. OF 1.6 SQ. FT. AND PROPER ICE LOADING.
2. ALUMINUM ALLOY 6063-T6 SHALL BE USED.

IMPORTANT NOTE:

TRANSFORMER BASE AND LIGHTPOLE TO BE LEVELED AS ONE UNIT. USING LEVELING SHIMS IF REQUIRED.

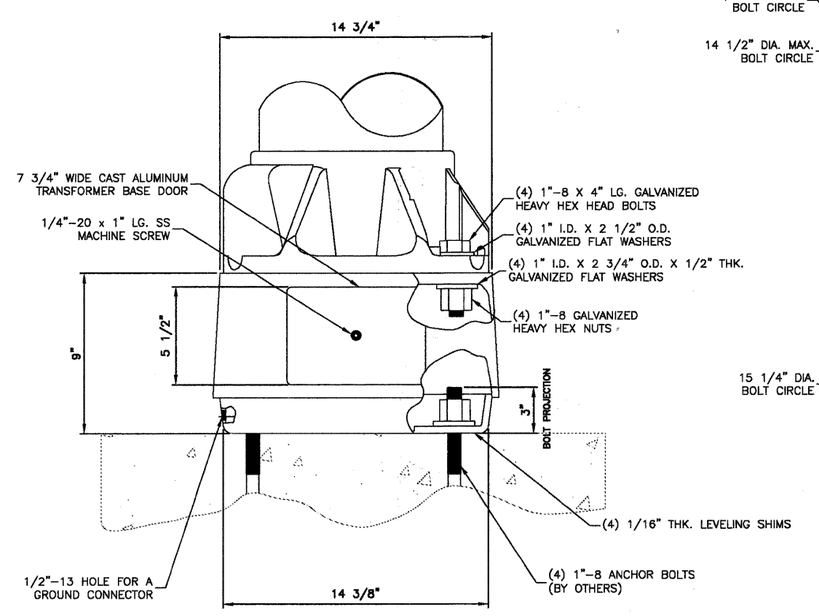

TRANSFORMER BASE DETAIL

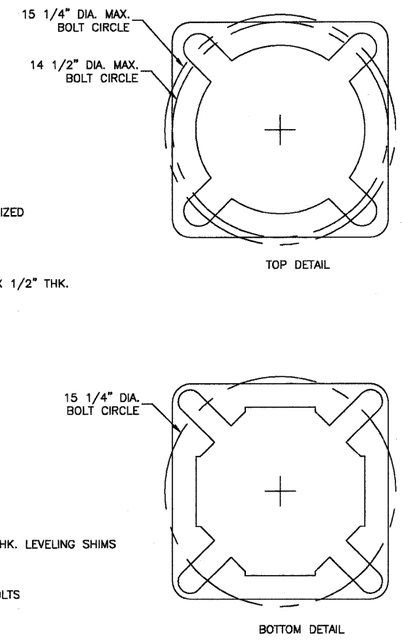

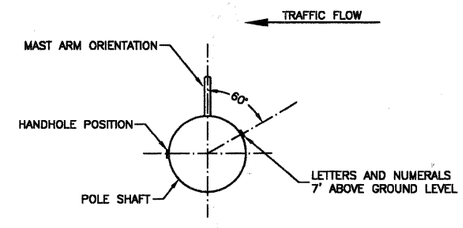

POSITION OF HANDHOLE AND NUMERALS ON POLE

FILE NAME = 09953-LGHT-03 - P01	USER NAME =	DESIGNED — PAP	REVISED —
		CHECKED — PKB	REVISED —
	PLOT SCALE = N/A	DRAWN — MJD	REVISED —
	PLOT DATE = 12/23/10	CHECKED — AG	REVISED —

STATE OF ILLINOIS
DEPARTMENT OF TRANSPORTATION

71ST STREET

EXISTING STREET LIGHTING - LIGHTING DETAILS

SCALE: N/A | SHEET NO. 83 OF 209 SHEETS | STA. N/A | TO STA. N/A

F.A.U. RTE.	SECTION	COUNTY	TOTAL SHEETS	SHEET NO.
1537	06-00050-00-GS	COOK	209	83

CONTRACT NO. 63556

FED. ROAD DIST. NO. 1 | ILLINOIS | FED. AID PROJECT CRE-9003(709)