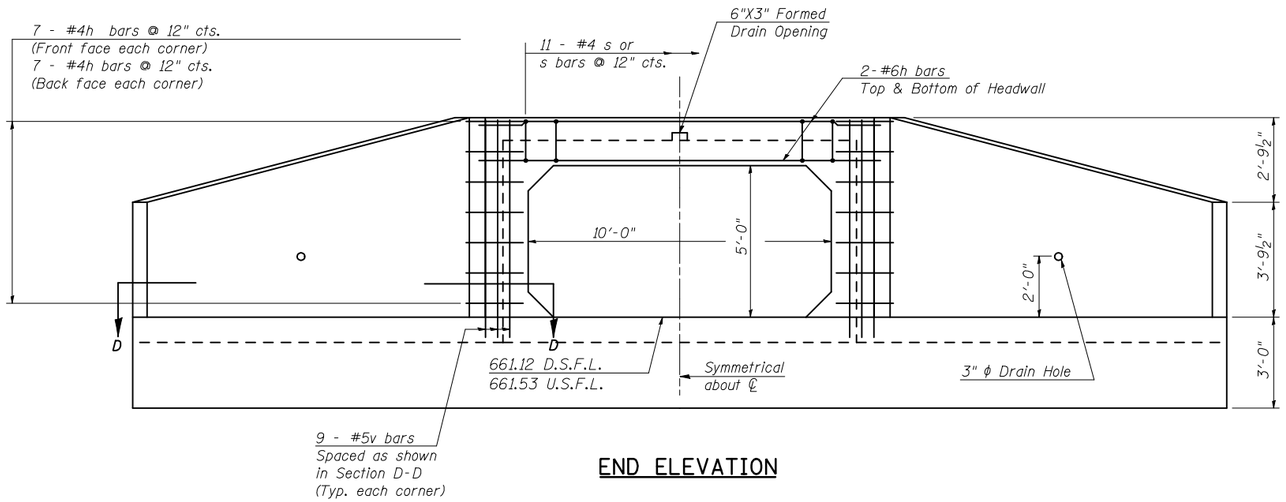

END ELEVATION

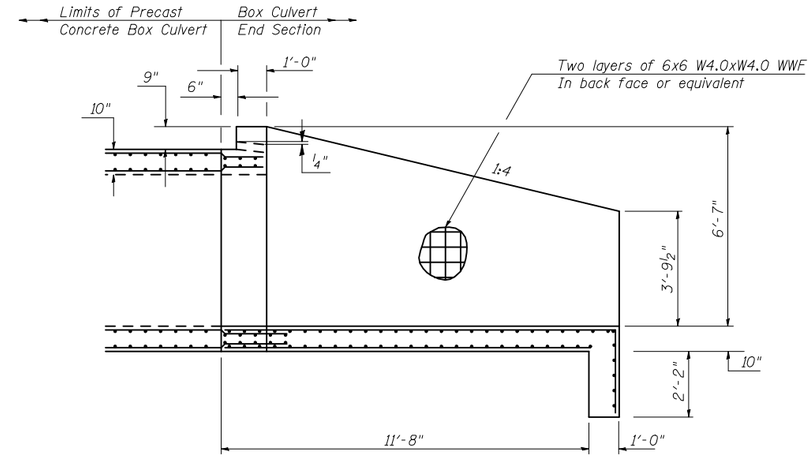

HALFSIDE ELEVATION

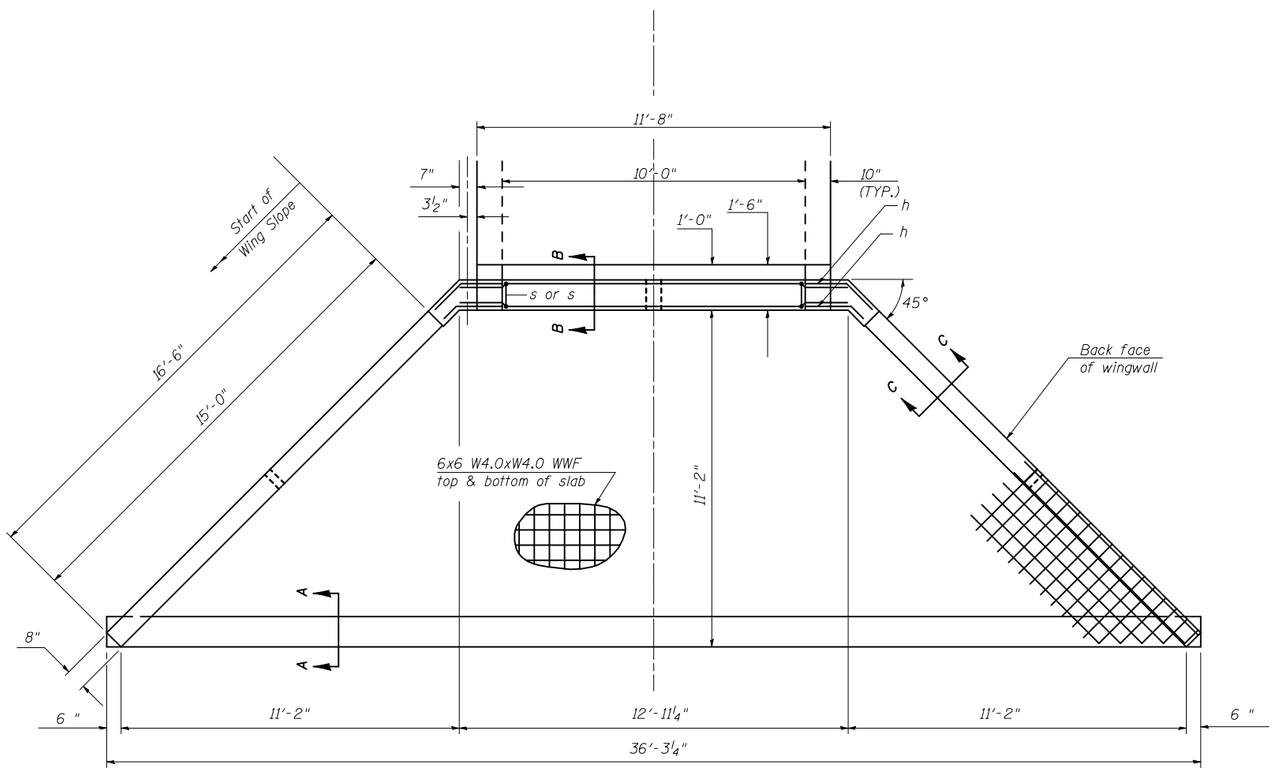

PLAN

BILL OF MATERIAL

For Information Only
(One End Section)

Bar	No.	Size	Length	Shape
h	4	#6	12'-7"	
h_1	10	#4	2'-7"	
h_2	10	#4	2'-4"	
s or s_1	9	#4	4'-2"	
v	18	#5	7'-2"	

Item	Unit	Total
Concrete Box Culverts	Cu. Yd.	18.0
Reinforcement Bars	Pound	269.0
Welded Wire Fabric	Sq. Ft.	1045.0

END SECTION DETAILS
SINGLE 10'x5' PRECAST BOX CULVERT
F.A.P. ROUTE 711 - SECTION 115CR
VERMILION COUNTY
STATION 172+31.00, S.N. 092-8086
CULVERT NO. 1

FILE NAME = c:\pw_work\pwidot\sherer jm\d0189007\D570617-sht-Details.dgn	USER NAME = sherer jm	DESIGNED - JMS	REVISED -
		DRAWN - JMS	REVISED -
	PLOT SCALE = 40.0000 ' / IN.	CHECKED -	REVISED -
	PLOT DATE = 11/16/2010	DATE - 031210	REVISED -

STATE OF ILLINOIS
DEPARTMENT OF TRANSPORTATION

BOX CULVERT END SECTION DETAILS
PROPOSED CULVERT NO. 1

SCALE: N/A | SHEET NO. 6 OF 8 SHEETS | STA. | TO STA.

F.A.P. RTE.	SECTION	COUNTY	TOTAL SHEETS	SHEET NO.
711	115CR	VERMILION	39	16
		CONTRACT NO. 70617		
		ILLINOIS FED. AID PROJECT		