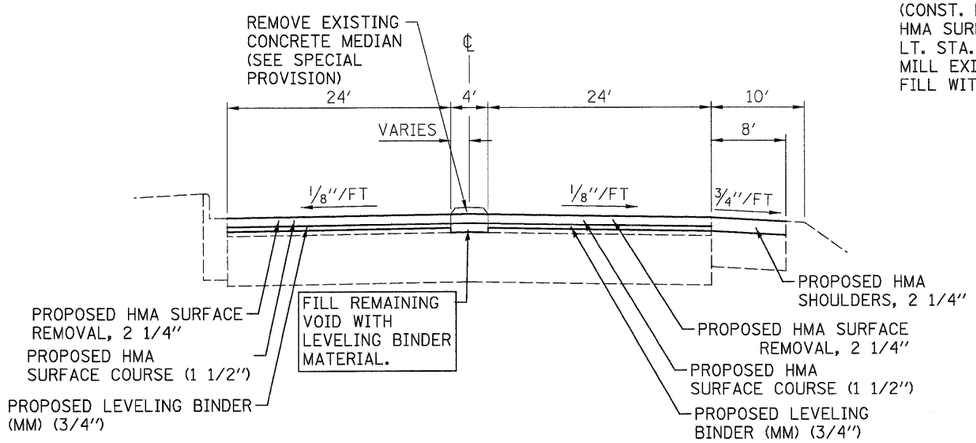


## PROPOSED TYPICAL SECTION

STA. 1189+65 TO STA. 1191+60

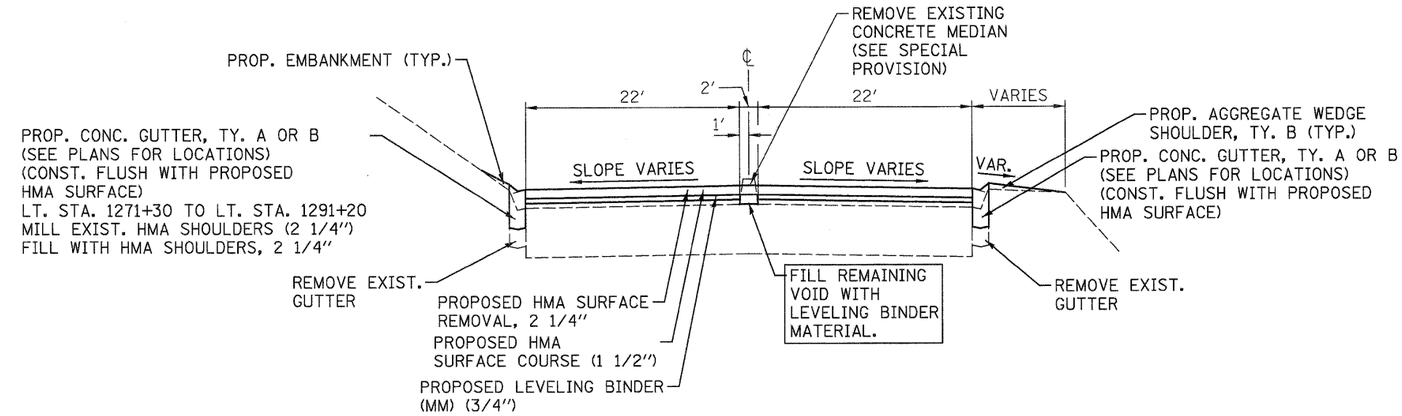


## PROPOSED TYPICAL SECTION

STA. 1217+00 TO STA. 1291+20
NOTE: NO EXISTING PLANS (BASED ON FIELD OBSERVATIONS)

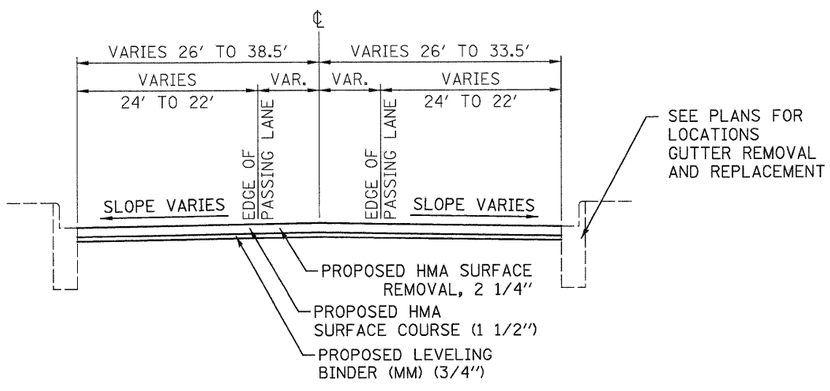


## PROPOSED TYPICAL SECTION

STA. 1191+60 TO STA. 1217+00
NOTE: NO EXISTING PLANS

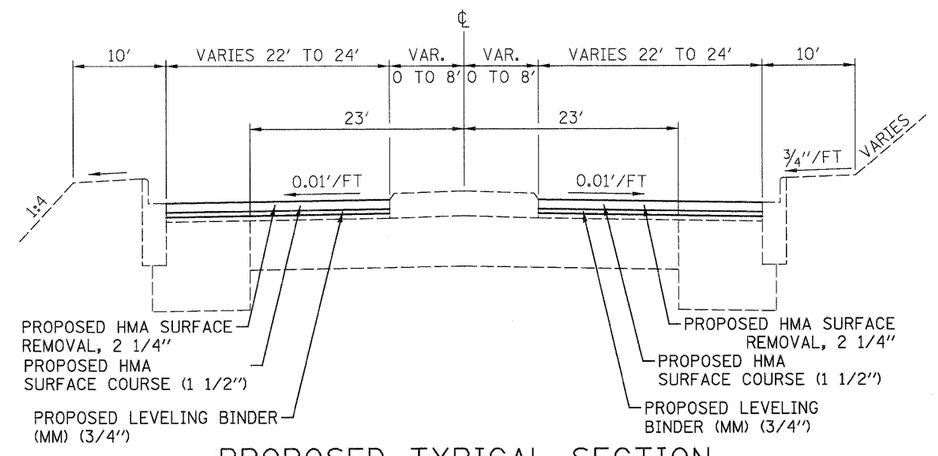


## PROPOSED TYPICAL SECTION

STA. 1291+20 TO STA. 1295+50

| | | | | | | | | | | | |
|---|---|---|---|---|---|---|---|---|---|---|---|
| FILE NAME = ...\cadd\D876D96-sht-typical.dgn | USER NAME = SJS | DESIGNED - | REVISED - | STATE OF ILLINOIS DEPARTMENT OF TRANSPORTATION | PROPOSED TYPICAL SECTIONS | | | F.A.U. RTE. | SECTION | COUNTY | TOTAL SHEETS / SHEET NO. |
| Johnson, Depp & Quisenberry CONSULTING ENGINEERS Springfield, Illinois | | DRAWN - | REVISED - | | | | | 9166 | 34-1RS-3 | ST. CLAIR | 87 / 16 |
| | PLOT SCALE = 8.0000 ′ / IN. | CHECKED - | REVISED - | | | | | | | CONTRACT NO. 76D96 | |
| | PLOT DATE = 12/15/2010 09:35:16 | DATE - | REVISED - | | SCALE: | SHEET NO. OF SHEETS | STA. 975+45.58 TO STA. 990+00.00 | | ILLINOIS FED. AID PROJECT | | |