*Cut h bars in Front Face of Wingwall, above Bonded Construction Joint, as required to fit.

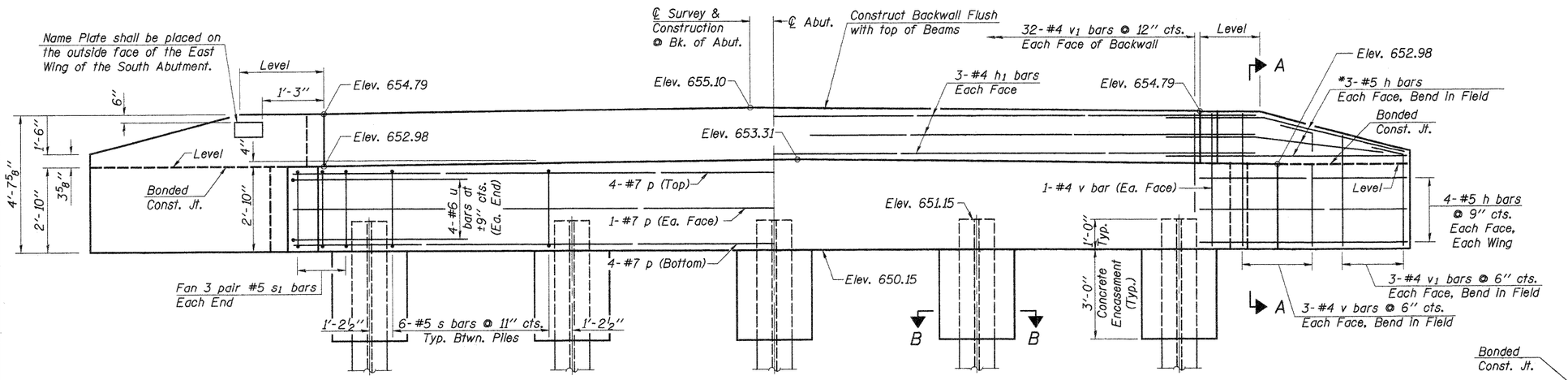

Note: After beams are in place and dowel rods grouted, the backwall and the portions of the wingwalls above the Bonded Construction Joint shall be poured.

ELEVATION

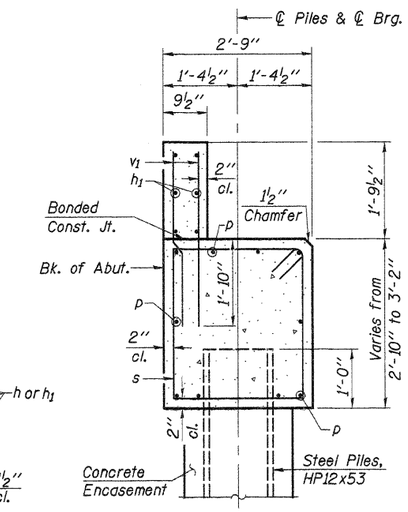

SECTION THRU ABUT.

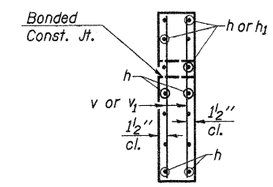

SECTION A-A

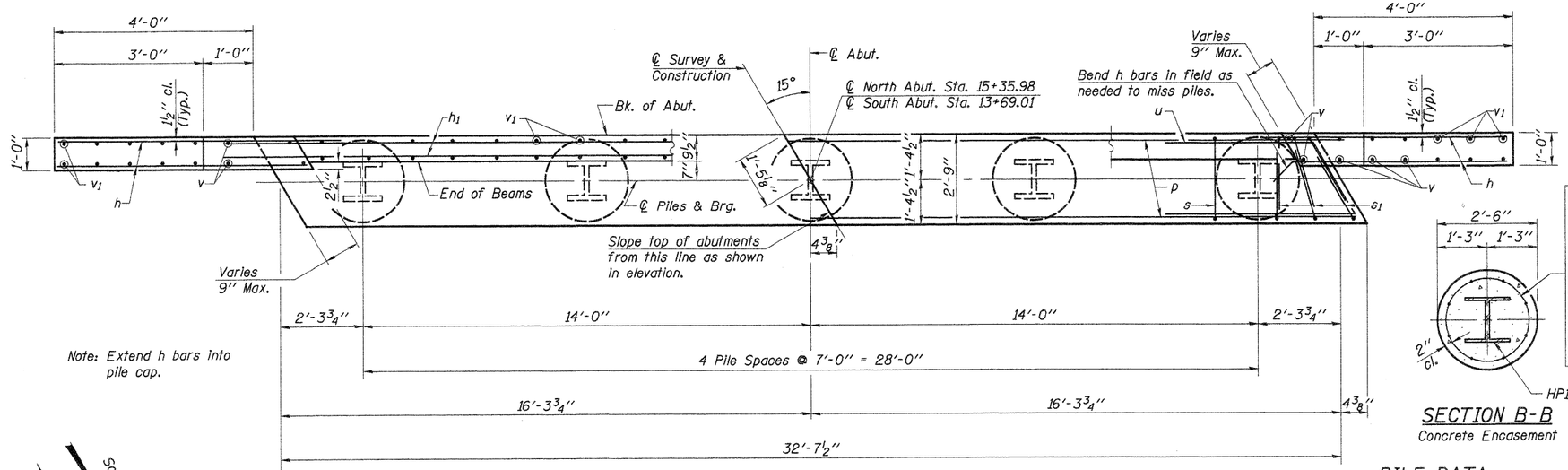

Note: Extend h bars into pile cap.

PLAN

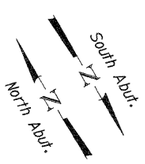

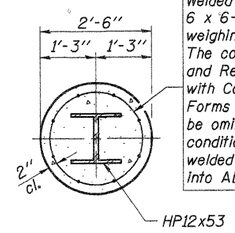

SECTION B-B

Concrete Encasement

Welded wire fabric 6 x 6-W4.0 x W4.0 weighing 58#/100 sq. ft. The cost of Excavation, and Reinforcement is Included with Concrete Encasement. Forms for Encasement may be omitted when soil conditions permit. Extend welded wire fabric 1'-0" min. into Abutment cap.

2 ABUTMENTS BILL OF MATERIAL

Bar	No.	Size	Length	Shape
h	56	#5	7'-0"	
h1	12	#4	34'-0"	
p	20	#7	32'-3"	
s	48	#5	10'-9"	
s1	24	#5	7'-4"	
u	16	#6	13'-1"	
v	32	#4	4'-4"	
v1	152	#4	3'-5"	
Concrete Structures			Cu. Yd.	27.0
Concrete Encasement			Cu. Yd.	5.5
Reinforcement Bars			Pound	3,480
Furnishing Steel Piles HP12x53			Foot	504
Driving Piles			Foot	504
Name Plates			Each	1
Test Pile, Steel HP12x53			Each	1

See Sheet 11 for Pile Details.

PILE DATA

Type & Size.....Steel HP12x53
No. Req'd. (2 Abuts.).....*10
Nominal Required Bearing.....300 kips
Factored Resistance Available.....150 kips
Estimated Length.....56 Ft./Pile

*Includes 1 Test Pile to be driven in a permanent location at the south abutment.

The test piles shall be driven to 110 percent of the Nominal Required Bearing indicated above.

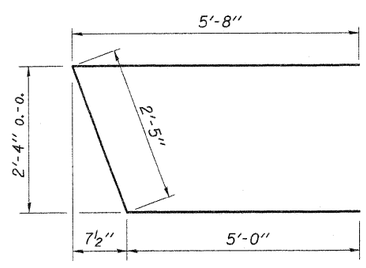

BAR u

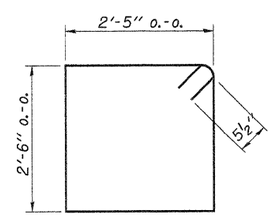

BAR s

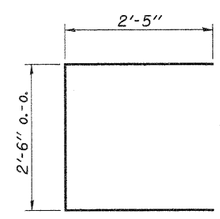

BAR s1

DESIGNED -	A.L.S.
CHECKED -	A.R.K.
DRAWN -	S.A.P.
CHECKED -	A.R.K. & A.L.S.

ABUTMENTS

S.N. 038-4751 ****06-02148-00-BR
06-18148-00-BR

FEHR-GRAHAM & ASSOCIATES, LLC
ENGINEERING AND SCIENCE CONSULTANTS
FREEPORT, IL ROCKFORD, IL ROCHELLE, IL MONROE, WI SPRINGFIELD, IL
4440 ASH GROVE SPRINGFIELD, IL 62711 (217)-793-8600 www.fehr-graham.com

TWP. RTE.	SECTION	COUNTY	TOTAL SHEETS	SHEET NO.
228	****	IROQUOIS	19	9
	BROS-075 (137)	CONTRACT NO. 87446		
ROAD DISTRICT	ILLINOIS	ASH GROVE/MILFORD		

FILE: 09-478_ABUTS.DGN DATE:11/19/09

*09-478