STATE OF ILLINOIS
DEPARTMENT OF TRANSPORTATION

RTE.	SECTION	COUNTY	TOTAL SHEETS	SHEET NO.
N 5TH ST	03-00289-00-BR	ADAMS	90	48
BRIDGE APPROACH SLAB DETAILS				

CONTRACT NO. 93542

SHEET 10 OF 18

Notes:
See sheet 9 of 18 for Detail A and View B-B.
Approach slab and parapet concrete shall be paid for as Concrete Superstructure.
Approach footing concrete shall be paid for as Concrete Structures.
Reinforcement shall be paid for as Reinforcement Bars, Epoxy Coated.
For v(E) bar details, see sheet 8 of 18.
The approach footing maximum applied service bearing pressure (Qmax) = 2.0 ksf.
For bar splicer details, see sheet 17 of 18.
Cost of excavation for approach footing included with Concrete Structures.
For Porous Granular Embankment (Special) and drainage treatment details, see sheet 1 of 18.
For additional parapet details, see sheet 8 of 18.

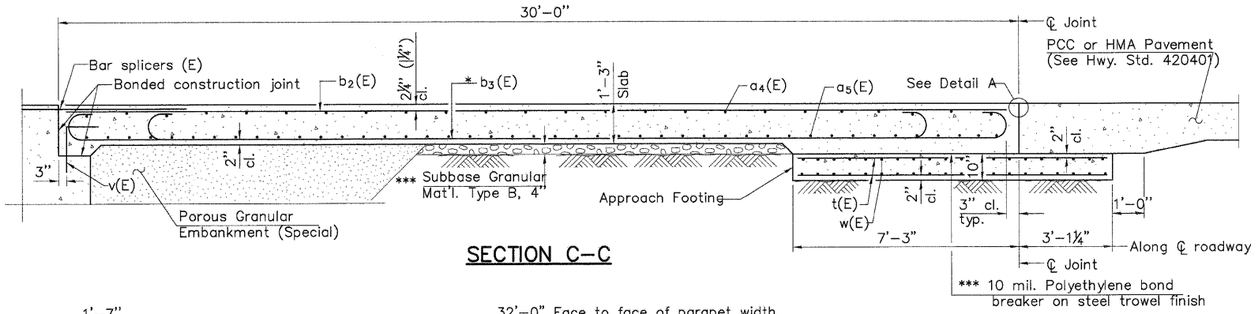

SECTION C-C

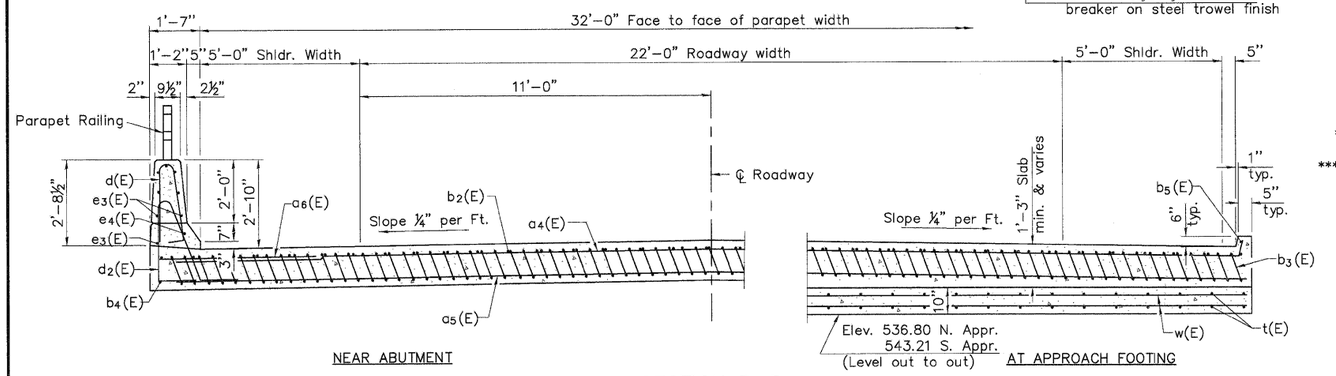

SECTION D-D
(See Plan for dimensions not shown)

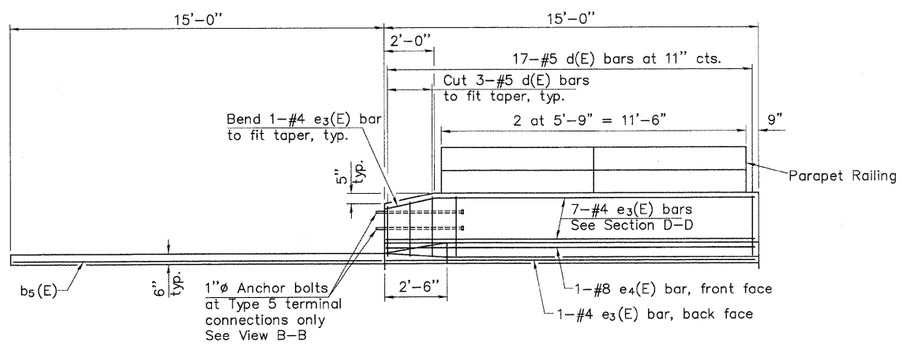

VIEW E-E

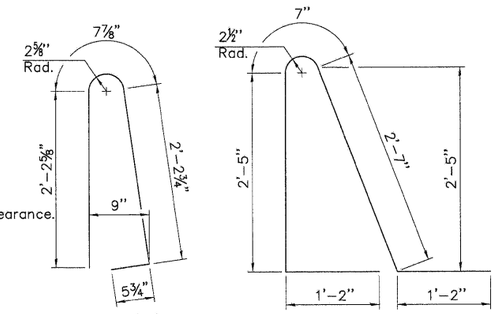

BAR d(E)

BAR d2(E)

* Tilt #9 b3(E) bars as required to maintain clearance.

*** Cost included with Concrete Superstructure.

TWO APPROACHES
BILL OF MATERIAL

Bar	No.	Size	Length	Shape
a4(E)	50	#4	35'-8"	
a5(E)	92	#5	34'-8"	
a6(E)	48	#6	6'-6"	
b2(E)	54	#4	29'-8"	
b3(E)	158	#9	29'-9"	
b4(E)	4	#4	14'-8"	
b5(E)	4	#4	14'-3"	
d(E)	68	#5	5'-7"	
d2(E)	68	#5	7'-11"	
e3(E)	32	#4	14'-8"	
e4(E)	4	#8	14'-8"	
t(E)	140	#4	10'-0"	
w(E)	80	#5	34'-8"	
Concrete Superstructure			Cu. Yd.	113.6
Concrete Structures			Cu. Yd.	21.6
Reinforcement Bars, Epoxy Coated			Pound	27,380

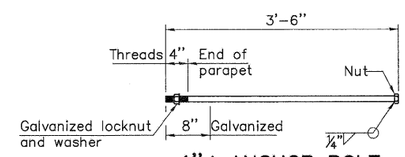

1"ø ANCHOR BOLT
(Cost included with Concrete Superstructure)

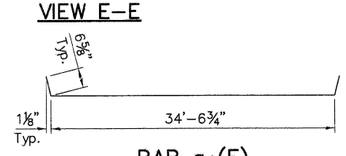

BAR a4(E)

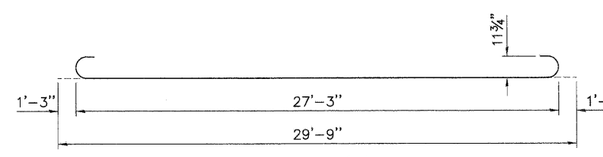

BAR b3(E)

BRIDGE APPROACH SLAB DETAILS
STRUCTURE NO. 001-6012
(Sheet 2 of 2)

DESIGNED	D.S.P.
CHECKED	C.S.B.
DRAWN	D.S.P.
CHECKED	C.S.B.

20
EXAMINED
ENGINEER OF BRIDGE DESIGN
PASSED
ENGINEER OF BRIDGES AND STRUCTURES

BA-L

11-1-09

PSBA
POEPPING, STONE, BACH & ASSOCIATES, INC.
ARCHITECTS ENGINEERS PLANNERS SURVEYORS
100 S 54TH ST. P.O. BOX 709 • QUINCY, IL 62306
WITH OFFICES IN KEOKUK, IOWA & HANNIBAL, MISSOURI
www.psba.com • PHONE 877-223-4605

REVISIONS	
NAME	DATE

CITY OF QUINCY, ILLINOIS
N. 5TH STREET BRIDGE
BRIDGE APPROACH SLAB DETAILS

SCALE: VERT. HORIZ.
DATE
DRAWN BY: DSP
CHECKED BY: CSB