RTE.	SECTION	COUNTY	TOTAL SHEETS	SHEET NO.
N 5TH ST	03-00289-00-BR	ADAMS	90	57
CONCRETE ENCASMENT – CONCRETE COLLAR DETAILS				

CONTRACT NO. 93542

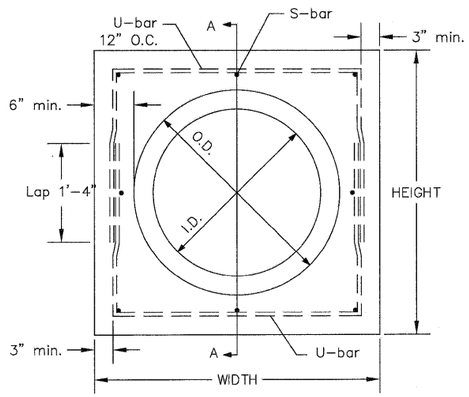

CONCRETE ENCASEMENT
CONCRETE COLLAR

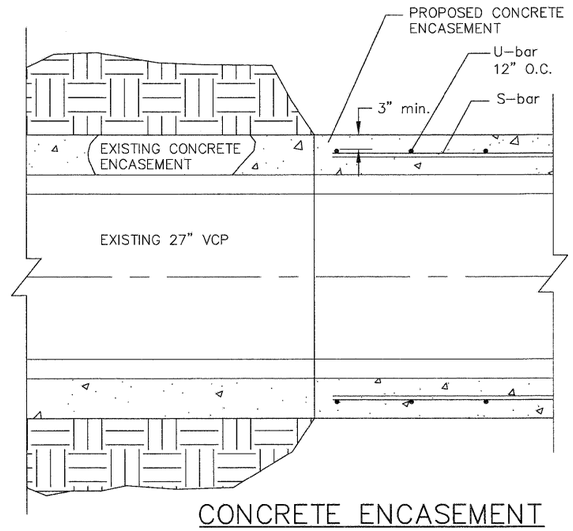

CONCRETE ENCASEMENT
SECTION A–A

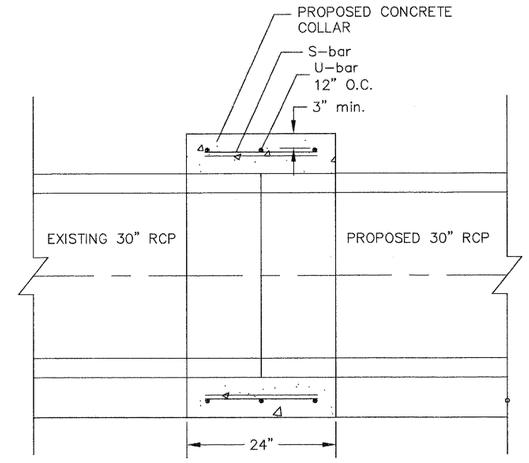

CONCRETE COLLAR
SECTION A–A

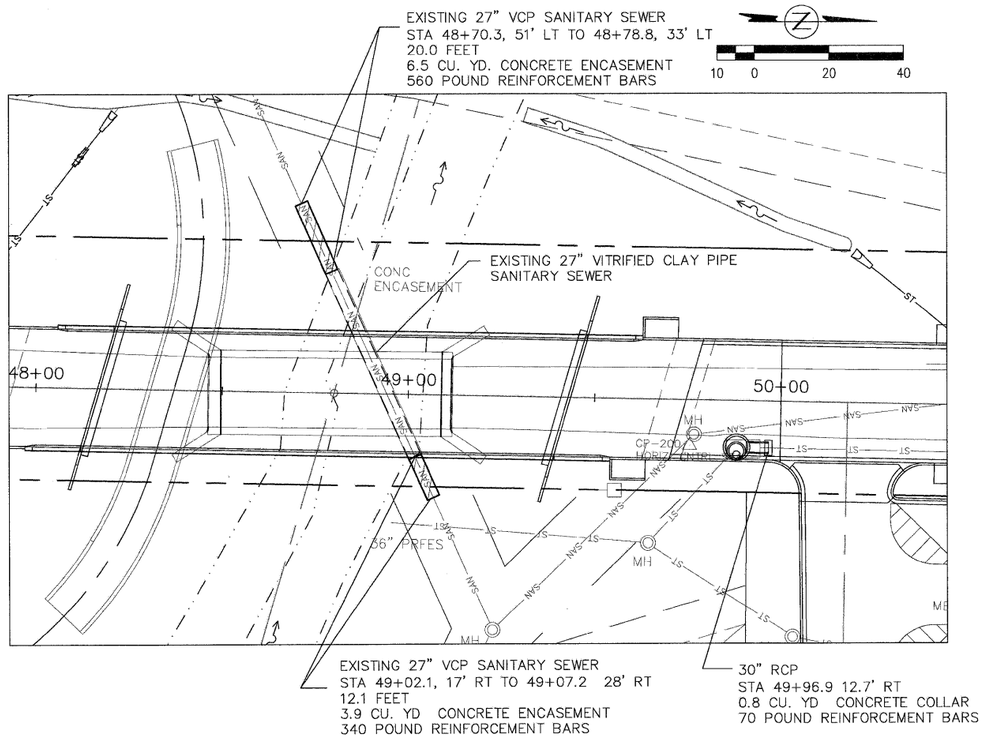

PLAN VIEW
CONCRETE ENCASEMENT / CONCRETE COLLAR

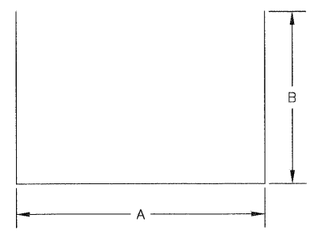

U–bar

LOCATION	REINFORCEMENT BARS							
	BAR	NO.	SIZE	A	B	LENGTH	SHAPE	POUND
	U	42	#5	3'-4"	2'-4"	9'	⊔	394.3
48+70.3 – 48+78.8 LT	S	8	#5			19'-6"	—	162.7
	U	26	#5	3'-4"	2'-4"	9'	⊔	244.1
49+02.1 – 49+07.2 RT	S	8	#5			11'-6"	—	96.0
	U	6	#5	3'-2"	2'-6"	8'-2"	⊔	51.1
49+96.9 RT	S	8	#5			1'-6"	—	12.5
							TOTAL	960.7
							USE	970

SCHEDULE OF CONCRETE COLLAR & CONCRETE ENCASEMENT

LOCATION	PIPE LENGTH	PIPE SIZE		CODE NO. 54248510 CONCRETE COLLAR			CODE NO. 50300280 CONCRETE ENCASEMENT		
	FEET	I.D.	O.D.	WIDTH	HEIGHT	CU YD	WIDTH	HEIGHT	CU YD
48+70.3 – 48+78.8 LT	20	27"	33.15"				3'-10"	3'-10"	6.5
49+02.1 – 49+07.2 RT	12.1	27"	33.15"				3'-10"	3'-10"	3.9
49+96.9 RT		30"	37"	4'-2"	4'-2"	0.8			
			TOTAL			0.8			10.4
			USE			1.0			10.4

CONCRETE ENCASEMENT SHALL BE USED FOR ENCASEMENT OF BRIDGE PILING AND EXISTING 27" CLAY SANITARY SEWER

PSBA
POEPPING, STONE, BACH & ASSOCIATES, INC.
ARCHITECTS ENGINEERS PLANNERS SURVEYORS
100 S 54TH ST, P.O. BOX 709 • QUINCY, IL 62306
WITH OFFICES IN IKEOKUK, IOWA & HANNIBAL, MISSOURI
www.psba.com • PHONE 877-223-4605

REVISIONS	
NAME	DATE

CITY OF QUINCY, ILLINOIS

N. 5TH STREET BRIDGE
MISC. DETAIL
CONCRETE ENCASEMENT
CONCRETE COLLAR

SCALE: VERT. HORIZ.
DATE
DRAWN BY: DBS
CHECKED BY: AMW