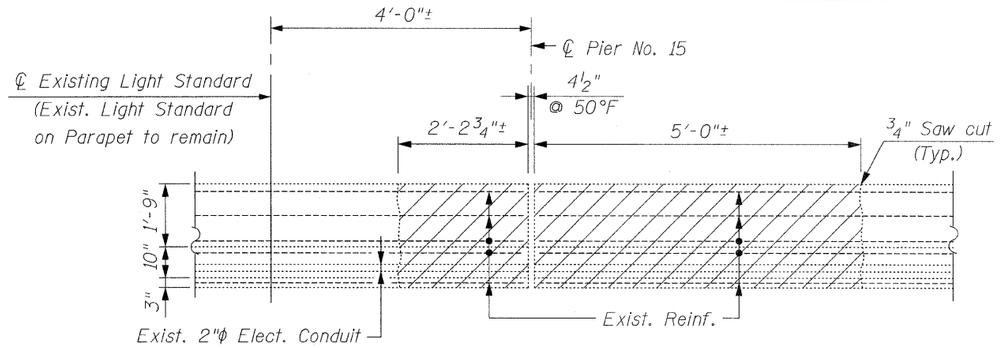

EXIST. SOUTHBOUND PARAPET
CONCRETE REMOVAL

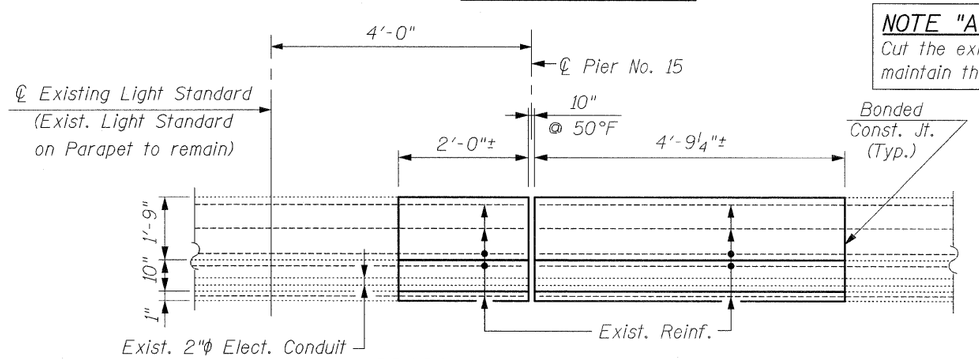

PROPOSED SOUTHBOUND PARAPET
CONCRETE REPLACEMENT

NOTE "A"
Cut the existing Reinforcement as to maintain the required minimum lap

MIN. BAR LAP:
#4 Bars = 1'-8"
#5 Bars = 2'-2"
#6 Bars = 2'-7"
#8 Bars = 4'-6"

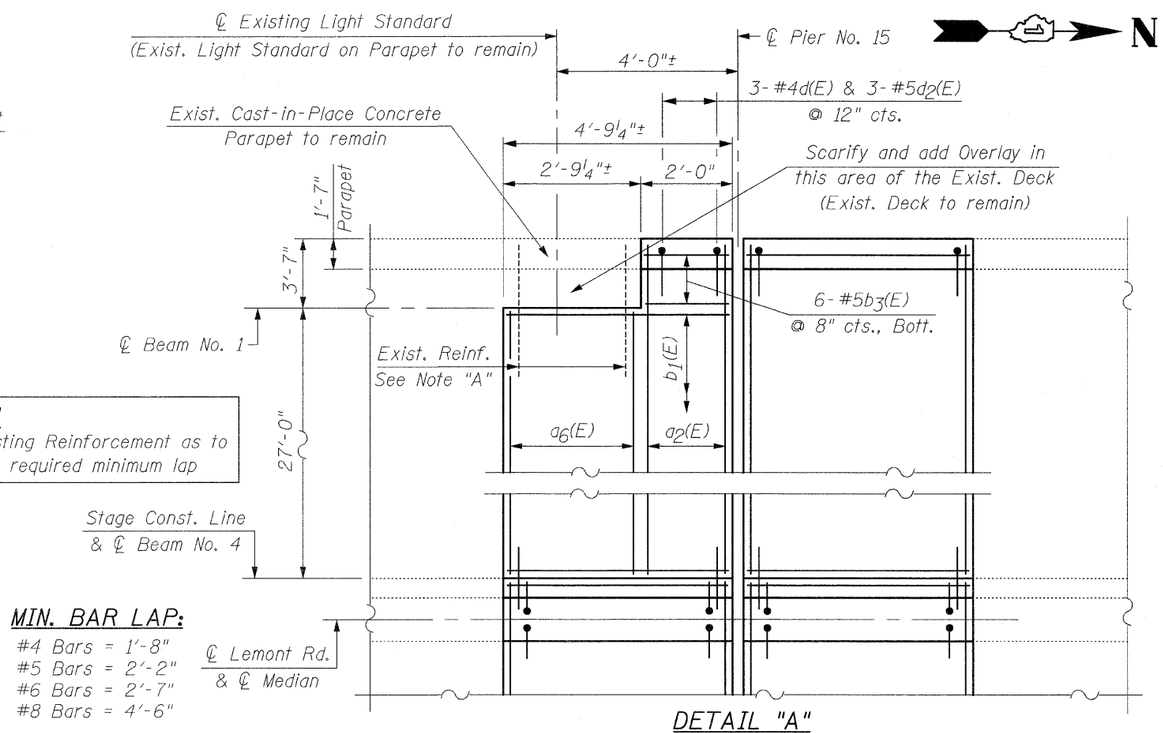

DETAIL "A"
(For remainder of Detail, See Sht. S23)

NOTE:
Work This Sheet With Sht's. S17 & S23

NOTES FOR CONDUIT EXPANSION/DEFLECTION JOINTS:

1. All materials (Fitting, Couplings, Conduit, etc.) included with Conduit embedded in Structure.
2. All Couplings shall be watertight.
3. Expansion assembly shall be installed in all Expansion Joints that are at least 1'-9" at 10°C, unless otherwise shown or as directed by the Engineer. Expansion Couplings shall have a total minimum movement of 6" or the movement capacity of the Structural Joint, whichever is greater. Verify maximum Longitudinal Joint movement with the Structural Engineer. Expansion/Deflection Assembly shall be installed as required.
4. Expansion Joint locations when indicated in the plans or as directed by the Engineer. Expansion/Deflection Couplings shall have a total Longitudinal Movement of 4" or the movement capacity of the Structural Joint, whichever is greater. Verify maximum Longitudinal Joint movement with the Structural Engineer. The rotational capacity of the Deflection Fitting shall allow for a minimum movement of 1" in the transverse direction.
5. Expansion/Deflection Coupling types shall be approved by the Engineer.
6. Refer to Structural Plans for location & size of Expansion Joints.
7. Refer to Structural Drawings for each Expansion Joint location and each Expansion Joint width.
8. The barrel of the Fitting shall be fully embedded in the concrete of one side of the Expansion Joint.
9. A cavity opening, if required, shall be 3 in. larger in diameter and a maximum depth of half of the Deflection Sleeve length. The Deflection Fitting shall be centered in the opening and embedded in the Concrete only up to the Deflection Fitting center.
10. Both Expansion and Deflection Couplings shall have Integral Bonding Jumpers.

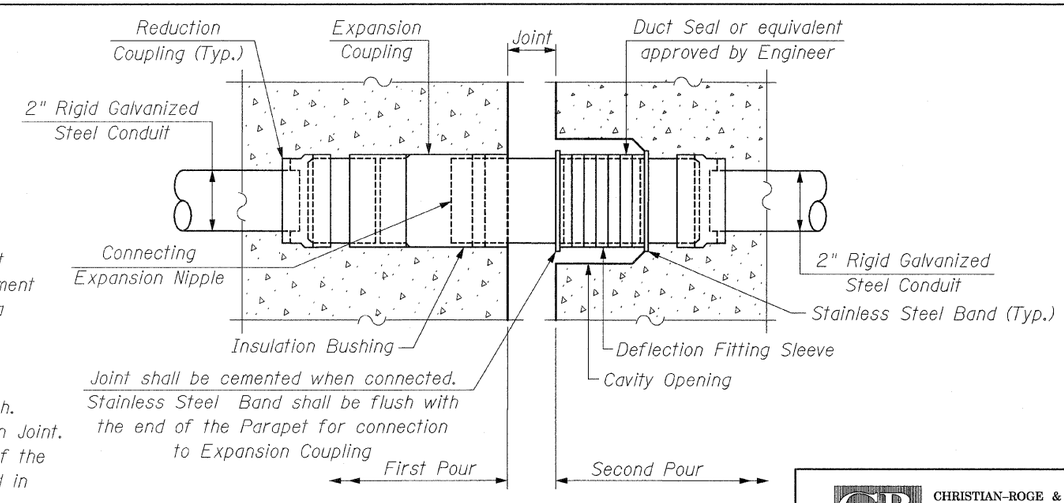

CONDUIT EXPANSION/DEFLECTION JOINT

CONDUIT EXPANSION/DEFLECTION JOINT DETAIL

CHRISTIAN-ROGE & ASSOCIATES, INC.
ENGINEERS / PLANNERS / SURVEYORS
211 W. WACKER DRIVE CHICAGO, IL. 60606
PHONE: (312)372-2023 FAX: (312)372-5274

FILE NAME = exp_Jt-Pier-15_II.dgn	USER NAME = IDOT	DESIGNED - B.N.S.	REVISED -	STATE OF ILLINOIS DEPARTMENT OF TRANSPORTATION	EXPANSION JOINT DETAILS AT PIER NO. 15 – II & CONDUIT EXPANSION / DEFLECTION JOINT DETAIL LEMONT ROAD OVER DES PLAINES RIVER S.N. 016-2504	F.A.U. RTE.	SECTION	COUNTY	TOTAL SHEETS	SHEET NO.
		DRAWN - R.E.S./D.L./F.M.	REVISED -			2612	3104 B-1-I-2	COOK	80	60
	PLOT SCALE = 50.0000 ' / IN.	CHECKED - B.N.S./J.C.N.	REVISED -					CONTRACT NO. 60D76		
	PLOT DATE = 1/30/2009	DATE - JANUARY, 2009	REVISED -		SCALE: SHEET NO. S24 OF S41 SHEETS STA. TO STA.	FED. ROAD DIST. NO.	ILLINOIS	FED. AID PROJECT		