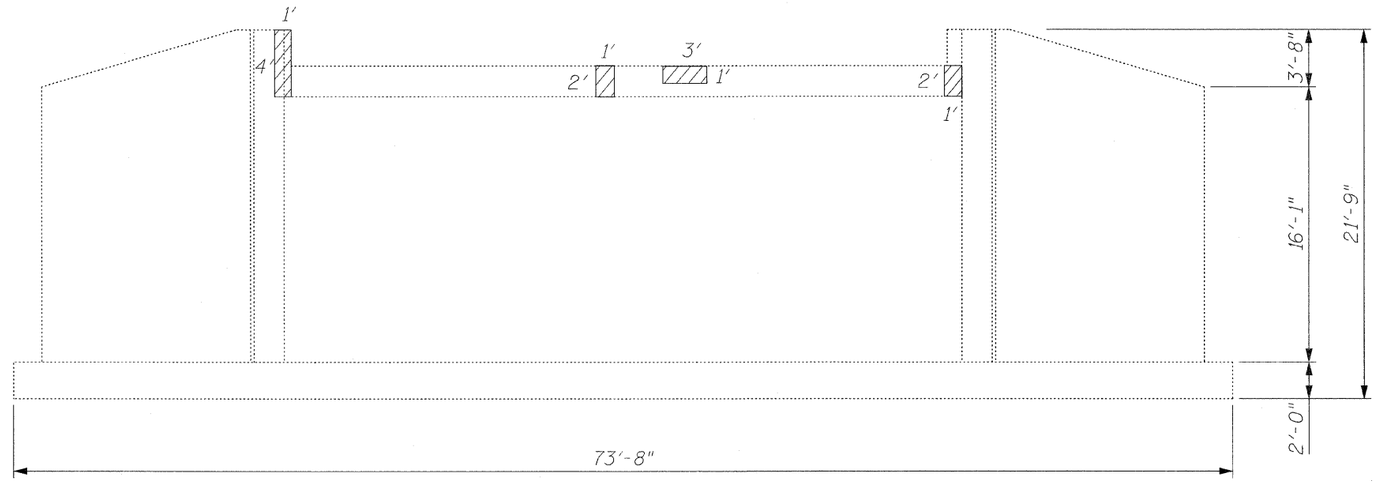

SOUTH ABUTMENT
(Looking South)

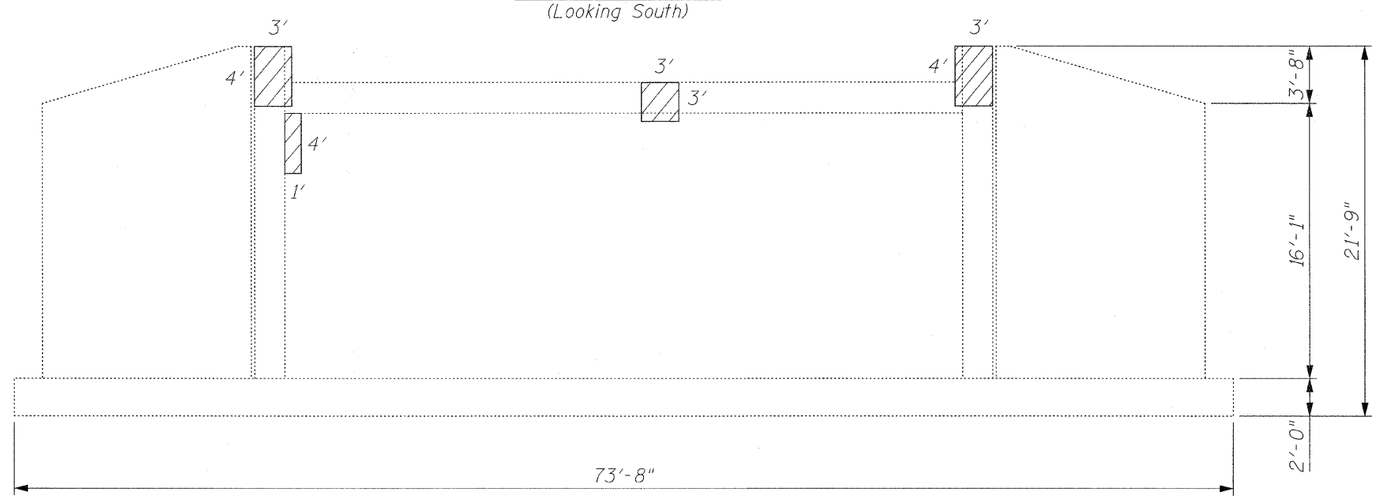

NORTH ABUTMENT
(Looking North)

BILL OF MATERIAL

ITEM	UNIT	QUANTITY
Structural Repair of Concrete (Depth Equal to or Less Than 5 in.)	Sq. Ft.	48

LEGEND:

Structural Repair of Concrete
(Depth Equal to or Less Than 5 in.)
North Abut. = 37.0 S.F.
South Abut. = 11.0 S.F.

CHRISTIAN-ROGE & ASSOCIATES, INC.
ENGINEERS / PLANNERS / SURVEYORS
211 W. WACKER DRIVE CHICAGO, IL. 60606
PHONE: (312)372-2023 FAX: (312)372-5274

FILE NAME = abutment repairs.sht	USER NAME = IDOT	DESIGNED - B.N.S.	REVISED -
		DRAWN - D.L./R.E.S./F.M.	REVISED -
	PLOT SCALE = 50.0000 ' / IN.	CHECKED - B.N.S./S.J.P./J.C.N.	REVISED -
	PLOT DATE = 1/12/2009	DATE - JANUARY 12, 2009	REVISED -

STATE OF ILLINOIS
DEPARTMENT OF TRANSPORTATION

ABUTMENT REPAIRS
U.S. 45 / 52 OVER SOUTH BRANCH FORKED CREEK
S.N. 099-0121

SCALE: | SHEET NO. S6 OF S6 SHEETS | STA. | TO STA.

F.A.P. RTE.	SECTION	COUNTY	TOTAL SHEETS	SHEET NO.
330	17 B-2-I-1	WILL	21	15
		CONTRACT NO. 60D79		

FED. ROAD DIST. NO. 1 | ILLINOIS | FED. AID PROJECT