CONTRACT NO. 70129

F.A.P. RTE.	SECTION	COUNTY	TOTAL SHEETS	SHEET NO.
721	•	PIATT	48	7

• 8RS-4 & (9,10)RS-3

EXISTING TYPICAL CROSS SECTION Ⓒ

FAP 721 (IL 105)

STATION	TO	STATION
Ⓐ 452+57.80		458+74.00 (N. APPROACH) Ⓓ
Ⓓ 463+72.10		468+80.20 (W. APPROACH) Ⓐ
Ⓓ 515+87.60		520+95.70 (S. APPROACH)

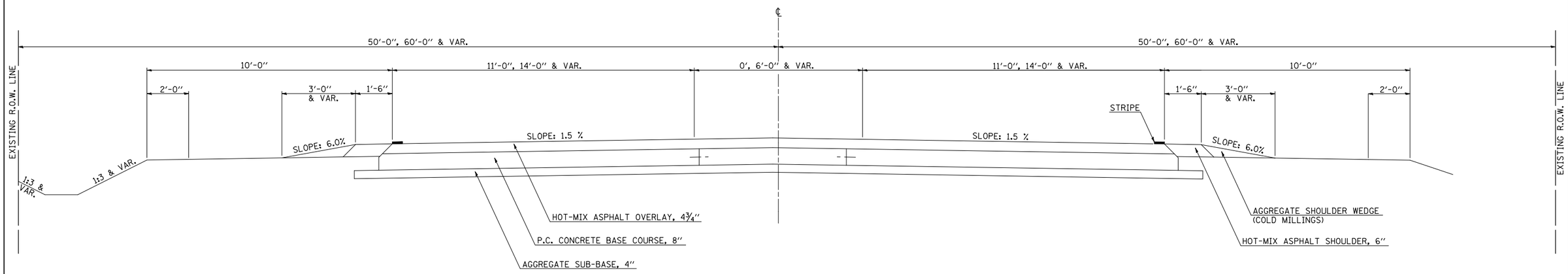

EXISTING TYPICAL CROSS SECTION Ⓓ

FAP 721 (IL 105)

	STATION	TO	STATION
Ⓒ (N. APPROACH)	458+74.00		459+00.00 (BK.)***
***	510+00.00 (AH.)		513+06.20 (BK.)***
***	460+72.10 (AH.)		463+72.10 (WEST)Ⓒ
	513+06.20		515+87.60 (SOUTH: F.A.P. RTE. 812) Ⓒ

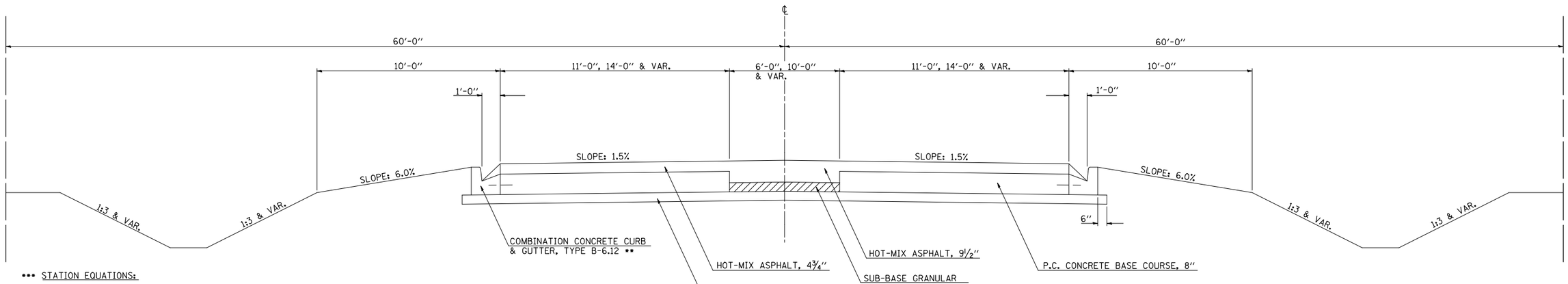

*** STATION EQUATIONS:

STATION 459+00.00 (BK.) = STATION 510+00.00 (AH.)

F.A. RTE. 741 (NORTH APPROACH) STATION 512+57.60 (BK.) =
T.R. 167 (EAST APPROACH) STATION 600+00.00 (AH.)

F.A. RTE.741 (N/S) STATION 513+06.20 (BK.) =
F.A. RTE. 741 (WEST) STATION 460+72.10 (AH.)

** COMBINATION CONCRETE CURB & GUTTER, TYPE B-6.12

LT. & RT. STATION 510+89.00 TO STATION 514+98.00 (FAP 812)
& LT. & RT. STATION 462+72.40 (IL 105 WEST)

PLOT DATE = 1/22/2009
FILE NAME = c:\pw_work\PWIDOT\CEARLOCKJD\d0101437\70129typicals.dgn
PLOT SCALE = 42.3529 ' / IN.
USER NAME = cearlockjd