CONTRACT NO. 74349

F.A.P. RTE.	SECTION	COUNTY	TOTAL SHEETS	SHEET NO.
781	2ZRS-1	CRAWFORD	191	133
STA.		TO STA.		
FED. ROAD DIST. NO.		ILLINOIS	FED. AID PROJECT	

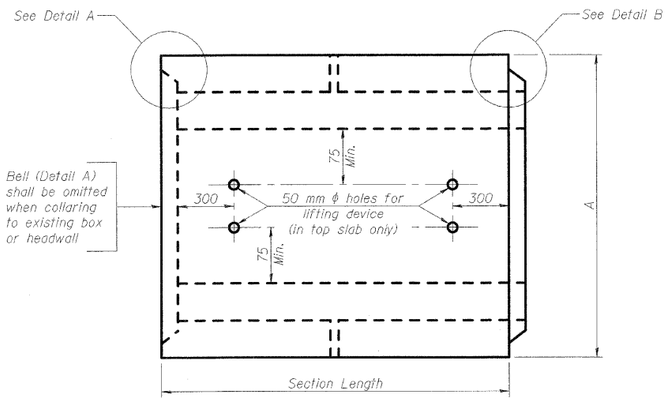

PLAN

Location of lifting holes may be varied as needed to clear reinforcement.

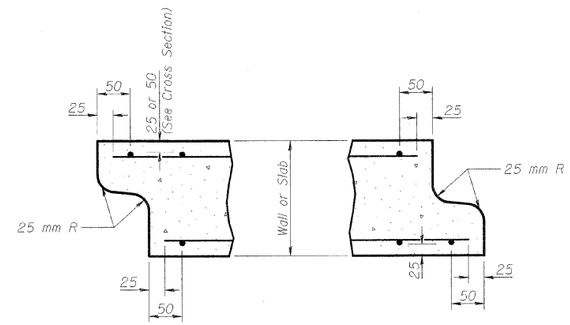

DETAIL A
(Typ. Inlet End)

DETAIL B
(Typ. Outlet End)

NOTES: Inlet and outlet ends shall be compatible.
End detail is subject to variation by fabricator.

Box Culvert No.	Span	Rise	Fill Depth at Shoulder	Design Specifications
1	900	450	< 0.6m	M-273M
4	600	600	< 0.6m	M-273M

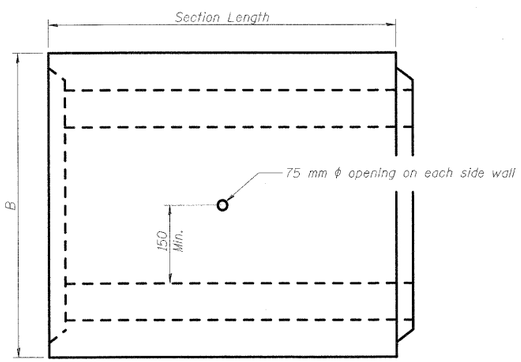

ELEVATION

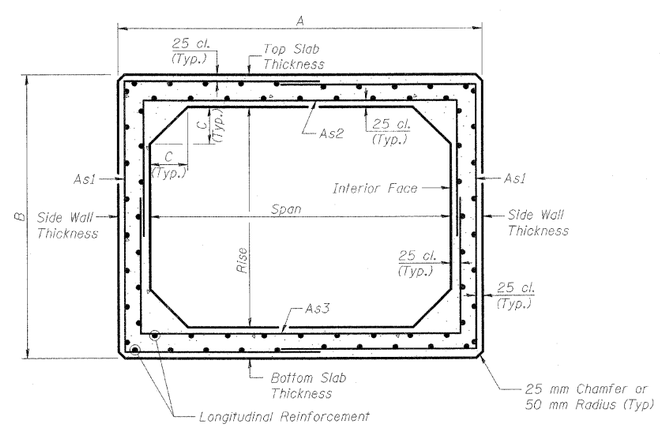

CROSS SECTION
(AASHTO M-259M)

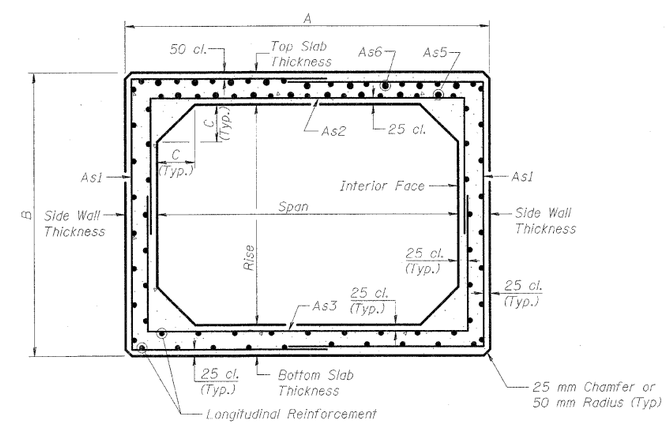

CROSS SECTION
(AASHTO M-273M)

GENERAL NOTES

1. The Contractor shall determine box culvert dimensions A, B & C and reinforcement requirements which satisfy AASHTO M-259M or M-273M.
2. The terms As1 thru As6 denote the required steel areas for reinforcement as specified in AASHTO M-259M and M-273M.
3. Reinforcement shall be welded wire fabric conforming to ASTM specifications A-185.
4. Splicing and laps shall conform to AASHTO M-259 and ASTM C-789.
5. Lifting holes shall be filled with concrete plugs and mastic after box sections are in place.
6. Edge beam reinforcement shall be provided per requirements of AASHTO M-273M.

SHEET S5 OF 9

REVISIONS	
NAME	DATE
LWJ	2-02-09

ILLINOIS DEPARTMENT OF TRANSPORTATION

BOX CULVERT EXTENSIONS
PRECAST SECTION DETAILS

SCALE NONE | DRAWN BY MLB
DATE DECEMBER 10, 2006 | CHECKED BY MTH

LIN NO. 9803

PLOT DATE = 2/5/2009
FILE NAME = H:\4428\Contract 74349\SHT_133_S-05.dgn