ALTERNATE ROUTE SIGNING - WEST CITY - BENTON

N

9

NOT TO SCALE

NOTES:

1. THE CONTRACTOR HAS THE OPTION OF USING METAL POSTS INSTEAD OF WOOD.
2. ALL SIGNS SHALL BE BLACK ON ORANGE. THE POSTS SHALL BE PLACED 12 FEET FROM THE EDGE OF PAVEMENT AS DIRECTED BY THE ENGINEER.
3. ALL SIGN HARDWARE REQUIRED TO INSTALL THE ALTERNATE ROUTE SIGNING SHALL BE INCLUDED IN COST OF **SIGN PANEL TYPE 1.**
4. SIGNS SHALL BE REMOVED ON COMPLETION OF THE CONTRACT AT THE DIRECTION OF THE ENGINEER. THIS WORK SHALL BE COMPLETED ACCORDING TO SECTION 724 OF THE STANDARD SPECIFICATIONS. THIS WORK WILL NOT BE PAID FOR. THE SIGNS AND POSTS SHALL BECOME THE PROPERTY OF THE CONTRACTOR.
5. ALTERNATE A = ILL. RTE. 37
6. THE RELOCATING, MAINTENANCE OR REPLACEMENT OF SIGNS SHALL BE PAID FOR IN ACCORDANCE WITH ARTICLE 109.04.
7. EXACT SIGN PLACEMENT WILL BE DETERMINED BY THE ENGINEER.
8. THE DISTRICT 9 OPERATIONS ENGINEER SHALL BE CONTACTED 10 DAYS PRIOR TO THE ERECTION OF SIGNS.

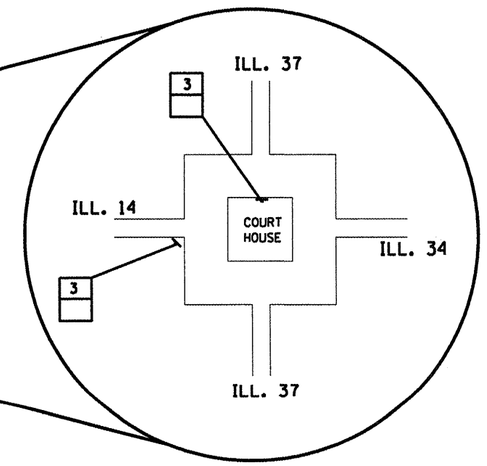

PROPOSED SIGN KEY

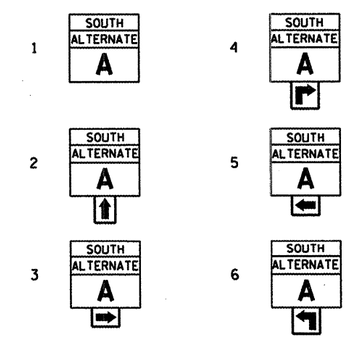

EXISTING SIGN KEY

- A STATE ROUTE SIGN
- B MILEAGE SIGN
- C SPEED LIMIT SIGN
- D DIRECTIONAL STATE ROUTE SIGN
- E COUNTY LINE SIGN
- F CITY/VILLAGE POPULATION SIGN
- G I-57 DIRECTIONAL SIGN

3 — PROPOSED SIGN
A — EXISTING SIGN

PLACE PROPOSED SIGN WITHIN 200' OF EXISTING SIGN IN RURAL AREAS. FOR PROPOSED SIGNS IN CITY LIMITS, THE SIGNS SHALL BE PLACED SO THEY DO NOT INTERFERE WITH EXISTING SIGNS AND AS DIRECTED BY THE ENGINEER.

FILE NAME = $FILEL$	USER NAME = $USER$	DESIGNED -	REVISED -	STATE OF ILLINOIS DEPARTMENT OF TRANSPORTATION	ALTERNATE ROUTE SIGNING	F.A.I. RTE.	SECTION	COUNTY	TOTAL SHEETS	SHEET NO.
		DRAWN -	REVISED -			57	*	FRANKLIN	47	40
	PLOT SCALE = $SCALE$	CHECKED -	REVISED -					CONTRACT NO. 78112		
	PLOT DATE = $DATE$	DATE -	REVISED -		SCALE: SHEET NO. OF SHEETS STA. TO STA.	FED. ROAD DIST. NO.	ILLINOIS	FED. AID PROJECT		

*28-11,1-1,1-2,2,2-1,3,3SIRS-2