98676

F.A.P. RTE.	SECTION	COUNTY	TOTAL SHEETS	SHEET NO
778	(2-B)-1	SALINE	74	74
STA.		TO STA.		
FED. ROAD DIST. NO.		ILLINOIS	FED. AID PROJECT	

DETAIL - BITUMINOUS SHOULDER AT GUARDRAIL TERMINAL

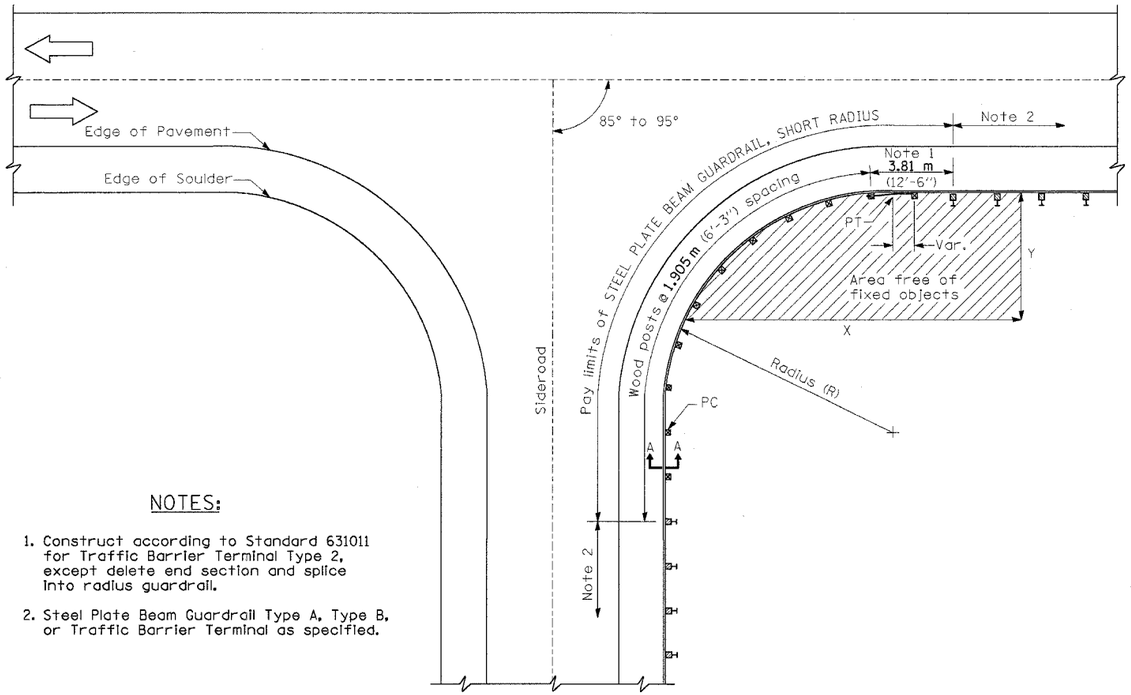

NOTES:

1. Construct according to Standard 631011 for Traffic Barrier Terminal Type 2, except delete end section and splice into radius guardrail.
2. Steel Plate Beam Guardrail Type A, Type B, or Traffic Barrier Terminal as specified.

PLAN

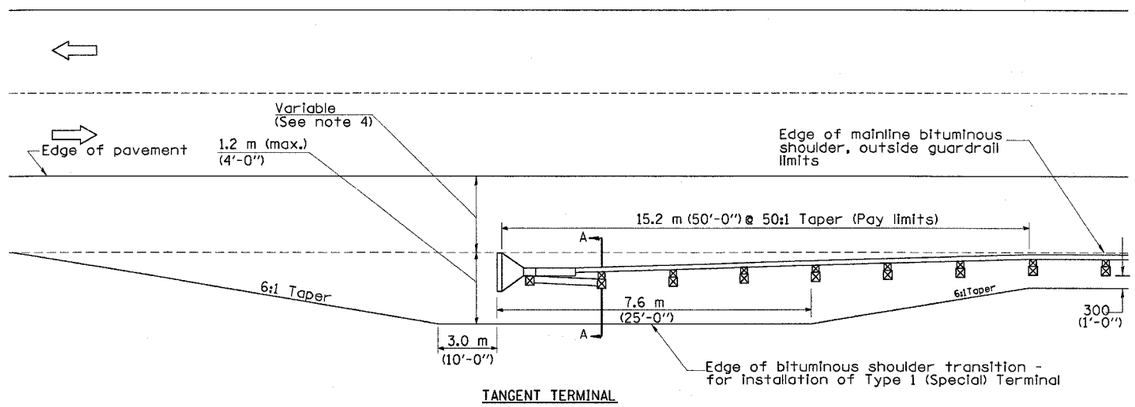

TANGENT TERMINAL

NOTES

1. 50:1 Taper required so the extruder head will not encroach on the shoulder.
2. All slope ratios are expressed as units of horizontal displacement (V:H).
3. All dimensions are in millimeters (inches) unless otherwise shown.
4. Edge of extruder head shall be placed at the outside edge of mainline bituminous shoulder.

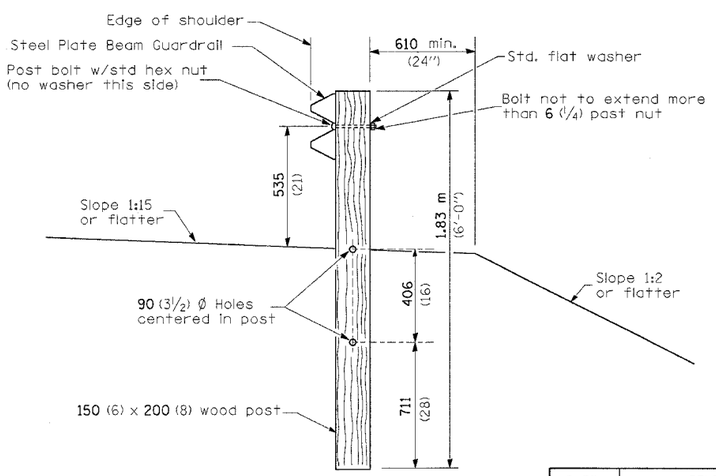

SECTION A-A

GENERAL NOTES

All slope ratios are expressed as units of vertical displacement to units of horizontal displacement (V:H).

All dimensions are in millimeters (inches) unless otherwise shown.

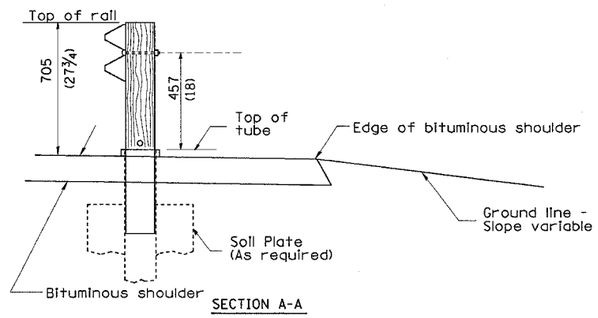

SECTION A-A

DATE	REVISIONS

STEEL PLATE BEAM GUARDRAIL, SHORT RADIUS

BDE Memo 36-03 Attachment A

REVISIONS	
NAME	DATE

ILLINOIS DEPARTMENT OF TRANSPORTATION
FAP ROUTE 778 (IL 34)
SECS. (2-B)-1 & (2B-1)-1, SALINE COUNTY

IDOT DISTRICT 9
STANDARD DETAILS

SCALE: VERT. HORIZ.
DATE
DRAWN BY
CHECKED BY

Mon Mar 8 08:38:32 2004
c:\projects\d904800\1134-ppl.dgn LV=1-4,6-9,11-56,58-63