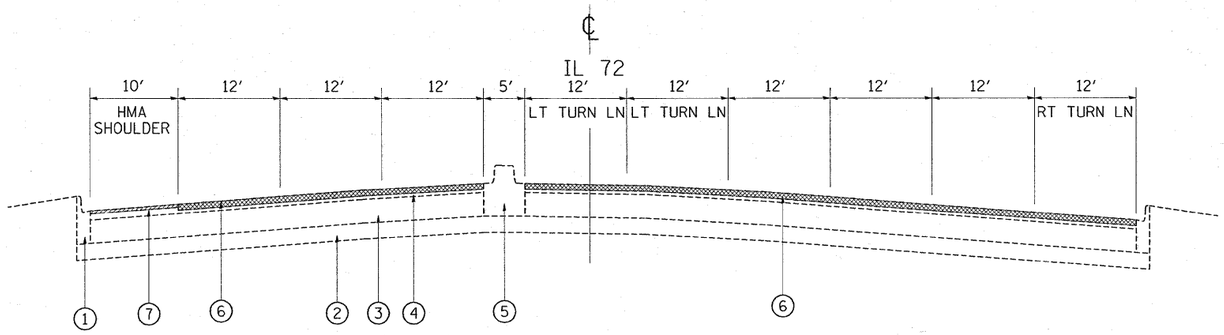

EXISTING TYPICAL SECTION
IL 72
STA. 23+50 TO 29+50
LOOKING PLUM GROVE RD.

STA. 51+20 TO STA. 56+80
LOOKING NATIONAL RD.

STA. 60+00 TO 63+79
LOOKING EAST

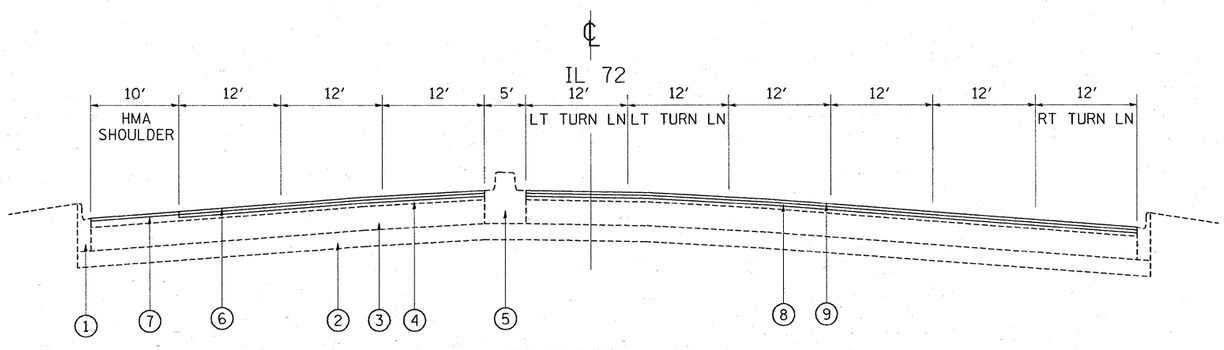

PROPOSED TYPICAL SECTION
IL 72
STA 23+50 TO 29+50
LOOKING PLUM GROVE RD.

STA. 51+20 TO STA. 56+80
LOOKING NATIONAL RD.

STA. 60+00 TO 63+79
LOOKING EAST

LEGEND

1. EXISTING B-6.24 COMB. CONC. CURB & GUTTER
2. EXISTING SUB BASE
3. EXISTING HMA BASE COURSE, ±10″
4. EXISTING HMA SURFACE COURSE, ±3″
5. EXISTING CONCRETE BARRIER MEDIAN
6. PROPOSED HMA SURFACE REMOVAL, 2 1/2″
7. PROPOSED HMA SURFACE REMOVAL, 1 3/4″
8. PROPOSED POLYMERIZED HMA SURFACE COURSE, MIX "F", N90, 1-3/4″
9. PROPOSED POLYMERIZED LEVELING BINDER (MACHINE METHOD) COURSE, IL-4.75, N50, 3/4″

FILE NAME = c:\pw_work\pwidot\byunsh\d0110889\D106909-sht-plan.dgn	USER NAME = byunsh	DESIGNED -	REVISED -
		DRAWN -	REVISED -
	PLOT SCALE = 50.9348 ′ / IN.	CHECKED -	REVISED -
	PLOT DATE = 2/5/2009	DATE -	REVISED -

STATE OF ILLINOIS
DEPARTMENT OF TRANSPORTATION

IL. 72 (HIGGINS RD.)
TYPICAL SECTIONS

SCALE: | SHEET NO. OF SHEETS | STA. TO STA.

F.A.P RTE.	SECTION	COUNTY	TOTAL SHEETS	SHEET NO.
341	32-3R.1-RS-1	COOK	5	35
		CONTRACT NO. 60F38		

FED. ROAD DIST. NO. | ILLINOIS | FED. AID PROJECT