F.A.I. RTE.	SECTION	COUNTY	TOTAL SHEETS	SHEET NO.
57	1920.1B-R	COOK	101	087
STA.		TO STA.		
FED. ROAD DIST. NO. 1	ILLINOIS	FED. AID PROJECT		

CONTRACT NO. 62533

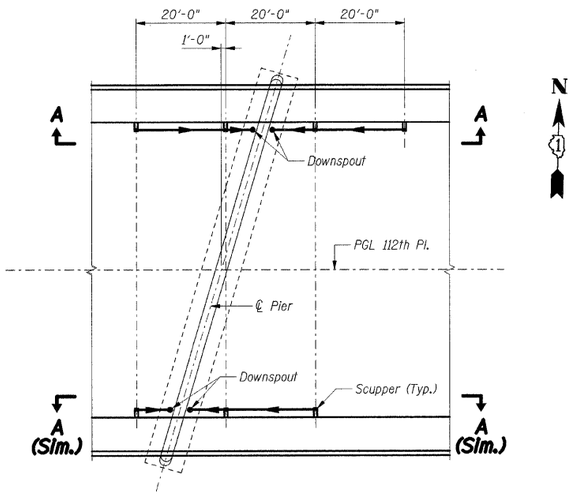

KEY PLAN

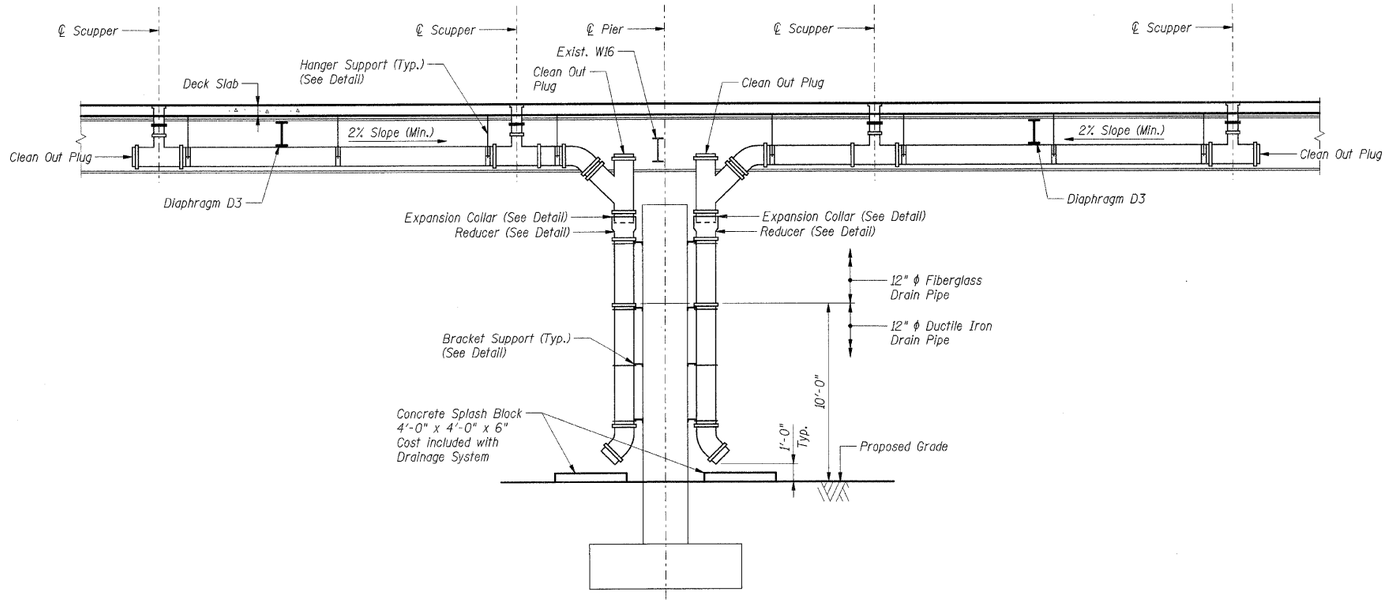

SECTION A-A

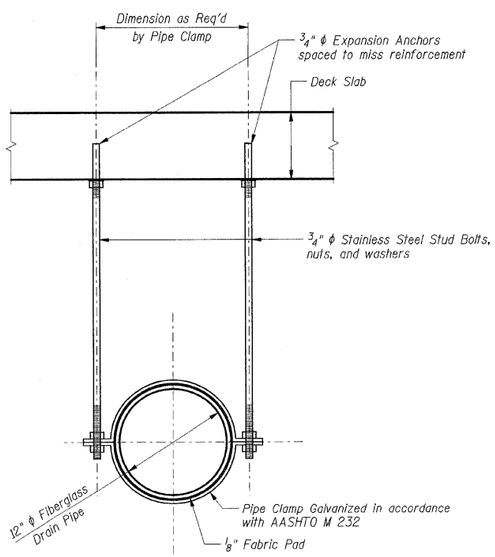

HANGER SUPPORT DETAIL

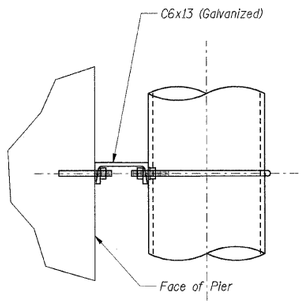

ELEVATION

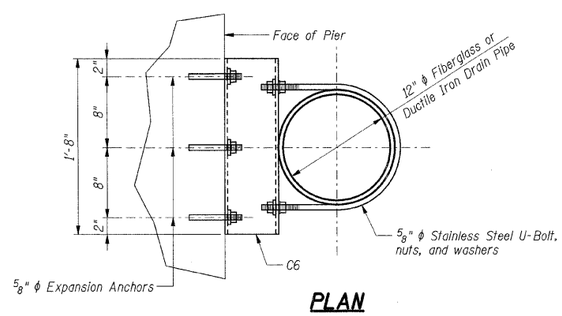

PLAN

BRACKET SUPPORT DETAIL

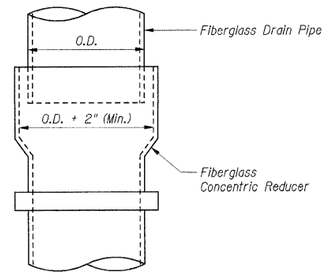

REDUCER DETAIL

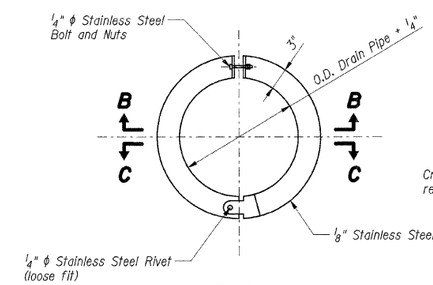

PLAN

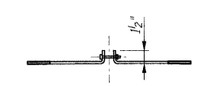

SECTION B-B

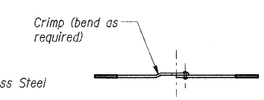

SECTION C-C

EXPANSION COLLAR DETAIL

DRAINAGE SYSTEM

Item	Unit	Total
12" ϕ Fiberglass Drain Pipe *	Feet	146
12" ϕ Ductile Iron Drain Pipe *	Feet	36

* Quantities are for information only. Cost of pipes shall be included in the lump sum cost of Drainage System.

SHT. S-021

REVISIONS	
NAME	DATE

ILLINOIS DEPARTMENT OF TRANSPORTATION
F.A.I. ROUTE 57 (INTERSTATE 57)
112TH PLACE BRIDGE DECK REPLACEMENT
112th PLACE OVER I-57
SN 016-0988 STA. 546+15.56
COOK COUNTY

BRIDGE DRAINAGE SYSTEM DETAILS

DATE: 01/16/09

DRAWN BY: CCE
CHECKED BY: JLR

TENG

TENG & ASSOCIATES, INC.
ENGINEERS/ARCHITECTS/PLANNERS
205 N. MICHIGAN AVE., CHICAGO, IL 60601
TELEPHONE: 312.616.0000

..\ALT00U6E.DGN, ..\FRP00U5I.DGN, ..\DKE00NL3.DGN, ..\BRBORDER.DGN, ..\DRD00NLF.DGN, ..\DRD00NLF.DGN, ..\SUR00N5V.DGN
1-16-2009, 13:08:12 T:\DOCUMENT\193086G\STRUCT\DGN\DRD00NLF.DGN RITCHIJL
pen table: N/A color table: K:\STANDARD\TENG\DATA\COLORTABLE.TBL