STATE OF ILLINOIS
DEPARTMENT OF TRANSPORTATION

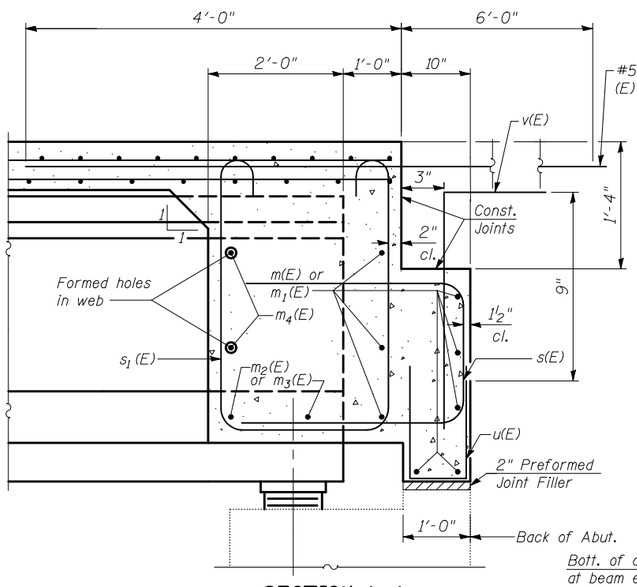

SECTION A-A
AT ABUTMENT
(Dim. at Rt. Ls except as noted)

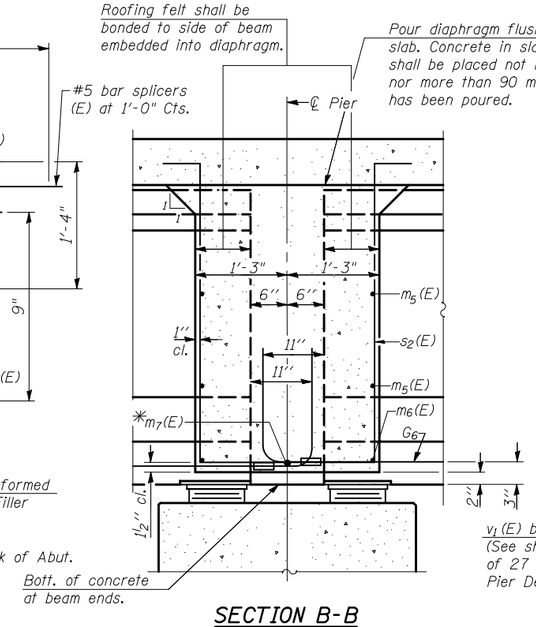

SECTION B-B
AT PIER
(Expansion)

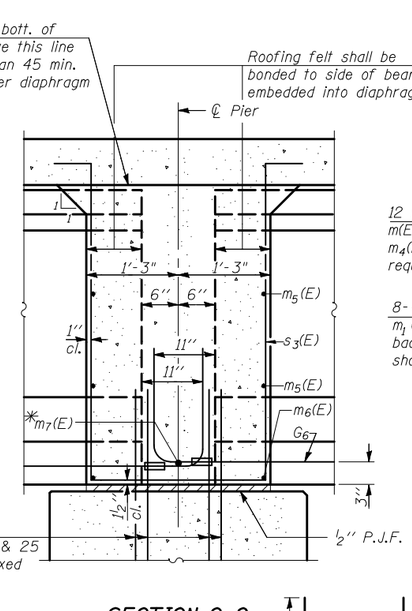

SECTION C-C
AT PIER
(Fixed)

*Tightly fasten the #8 bars together with No. 9 wire ties.

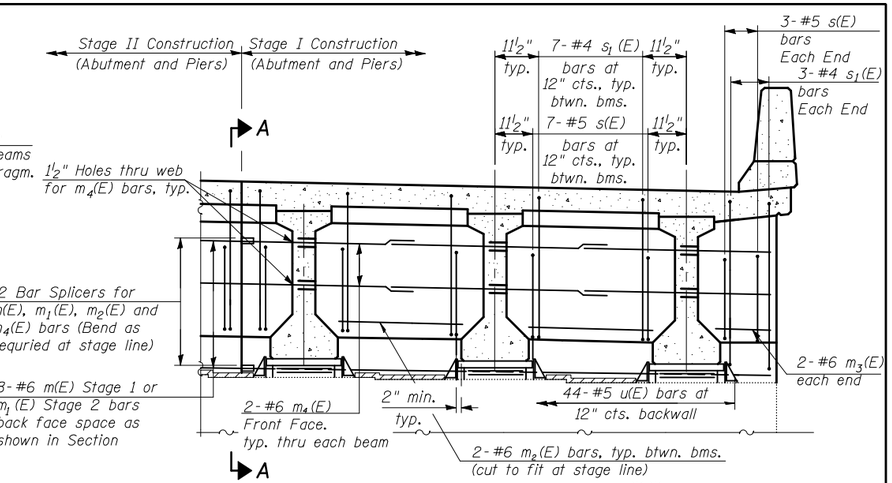

DIAPHRAGM AT ABUTMENT **

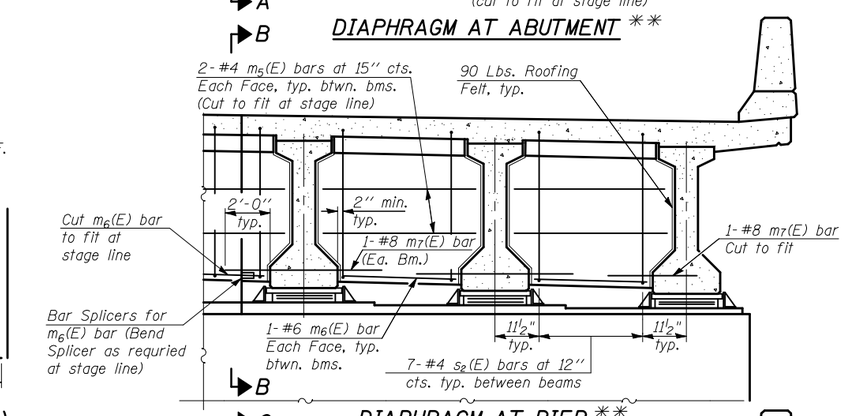

DIAPHRAGM AT PIER **
(Expansion)

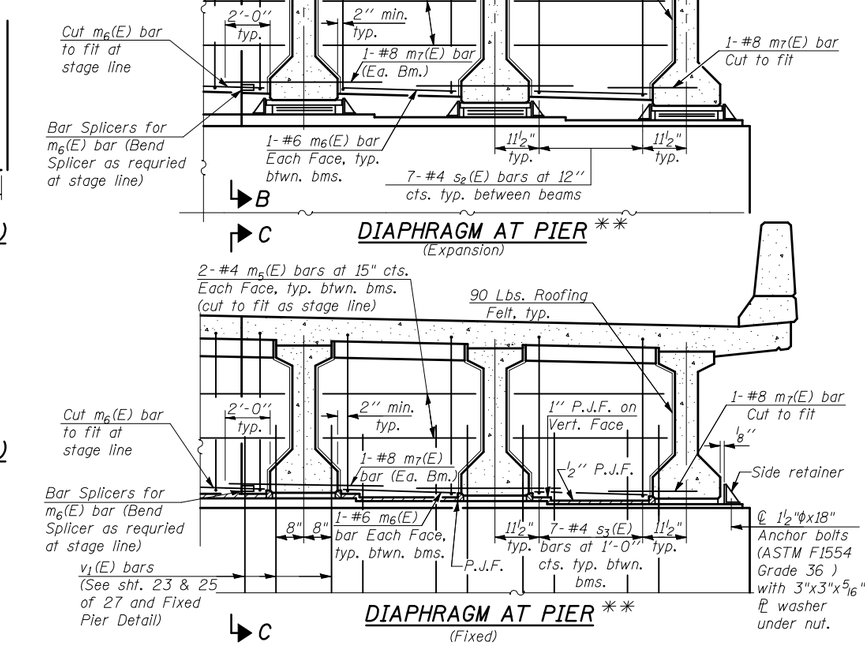

DIAPHRAGM AT PIER **
(Fixed)

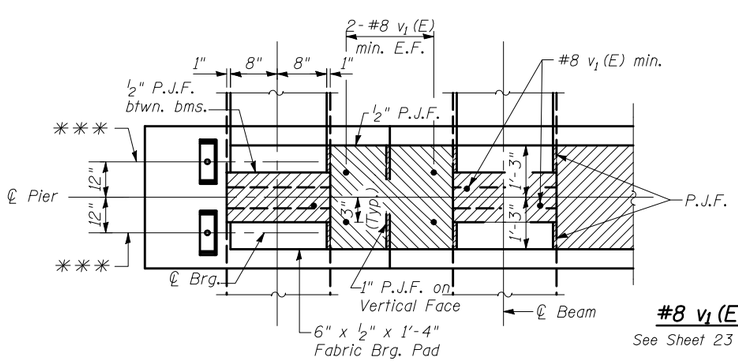

FIXED PIER

*** ℄ 1½" φ x 18" Anchor bolts with 3"x 3" x5/16" ℙ washer under nut. Holes in cap to be drilled after beams are in place.

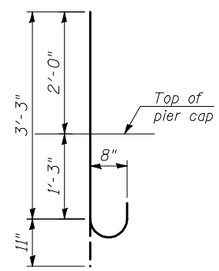

#8 v1(E) (MIN.) DOWEL BAR
See Sheet 23 & 25 of 27 for Bill of Material

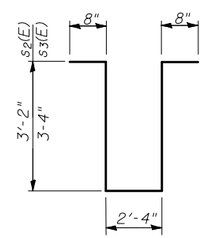

BARS s2(E) & s3(E)

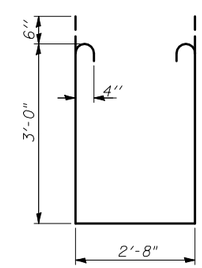

BAR s1(E)

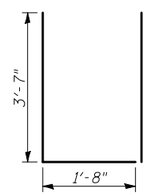

BAR s(E)

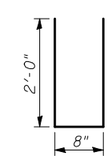

BAR u(E)

MIN. BAR LAP
#6 Bar = 2'-7"

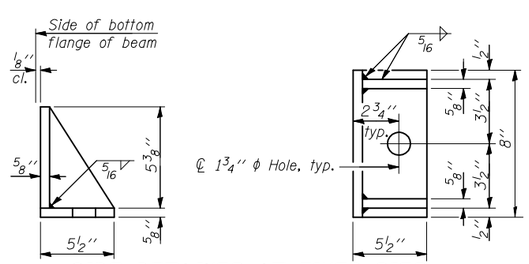

SIDE RETAINER AT FIXED PIER
(2 required each side of Pier 2)
Equivalent rolled angle with stiffeners will be allowed in lieu of welded plates.

Notes:
Reinforcement bars in diaphragm are billed with superstructure on sheet 12 of 27 .
Concrete in diaphragm is included with Concrete Superstructure on sheet 12 of 27.
The s(E), s1(E), s2(E) and s3(E) bars shall be placed parallel to the beams. Spacing for these bars shall be at right angles to the beams.
Cost of 90 Lb. roofing felt is included with Concrete Superstructure.
Horizontal dimensions for Sec. B-B and Sec. C-C are along ℄ of beam unless otherwise noted.
The side retainer shall be galvanized after shop fabrication according to AASHTO M111.
See sheet 17 of 27 for anchor bolt requirments.

**Looking West for S.N. 057-0120
Looking East for S.N. 057-0121

DIAPHRAGM DETAILS
I-74 OVER LITTLE KICKAPOO CREEK
STRUCTURE NO. 057-0120
AND 057-0121

STRAND ASSOCIATES, INC.

DESIGNED	RRD				
CHECKED	AJS				
DRAWN	KAS				
CHECKED	JAR				

	F.A.I. RTE.	SECTION	COUNTY	TOTAL SHEETS	SHEET NO.
SHEET NO. 11	74	(57-21B)BR	MCLEAN	61	23
27 SHEETS	SUPERSTRUCTURE DETAILS (2 OF 3)		CONTRACT NO. 70641		
	FED. ROAD DIST. NO. 7	ILLINOIS	FED. AID PROJECT		