Note:
Work this sheet with sheet 16 of 24.

* Order $h_7(E)$ & $v_7(E)$ bars full length cut to fit as shown and use remainder of bars in opposite face of curtain wall. See Field Cutting Diagram on Sheet 16 of 24.

** See Vaulted Abutment & Slopewall Detail on sheet 2 of 24.

*** 50 mm ϕ Galvanized Conduit (Sch. 40 pipe) shall conform to the requirements ANSI C 80.1 or UL 1242. Thread and cap each end. Cost included with Concrete Structures. (See Details Sheet 2 of 24).

ROUTE NO.	SECTION	COUNTY	TOTAL SHEETS	SHEET NO.
S.B.I.R. F.A.P. 310	*	MADISON	272	118
FED. ROAD DIST. NO. 7	ILLINOIS	FED. AID PROJECT-		

SHEET NO. 17
24 SHEETS

* 60-15HB-2 CONTRACT NO. 76624

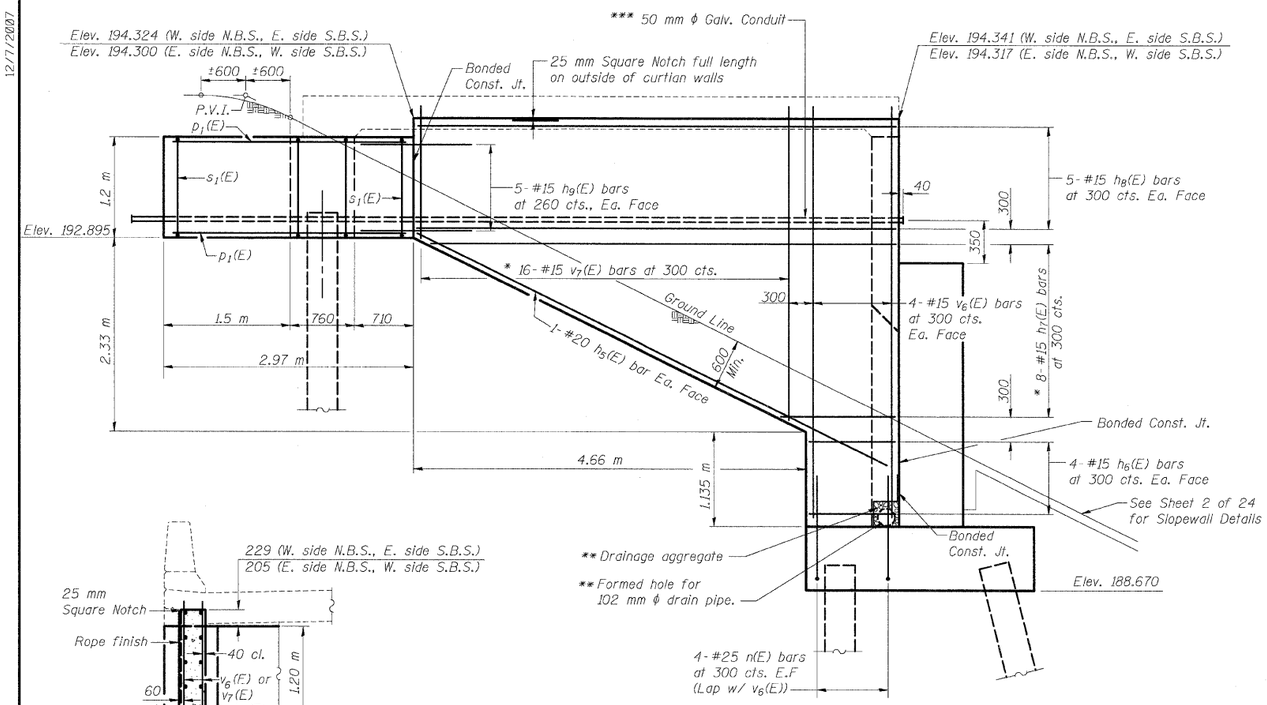

SIDE ELEVATION

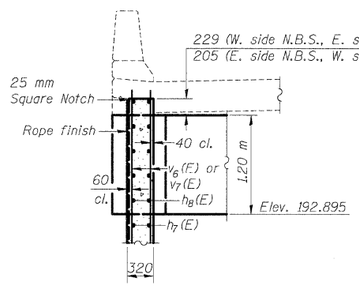

SECTION C-C

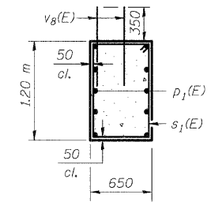

SECTION D-D

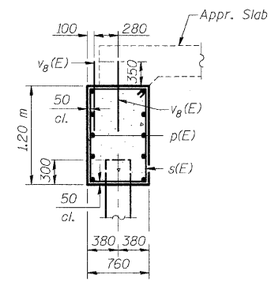

SECTION B-B

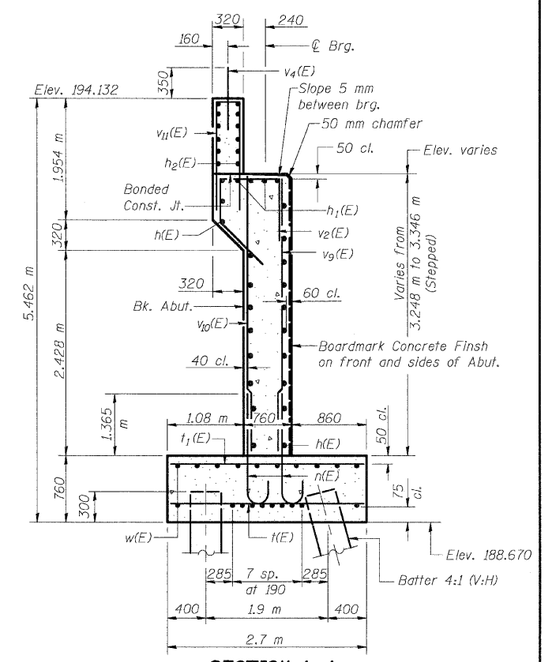

SECTION A-A

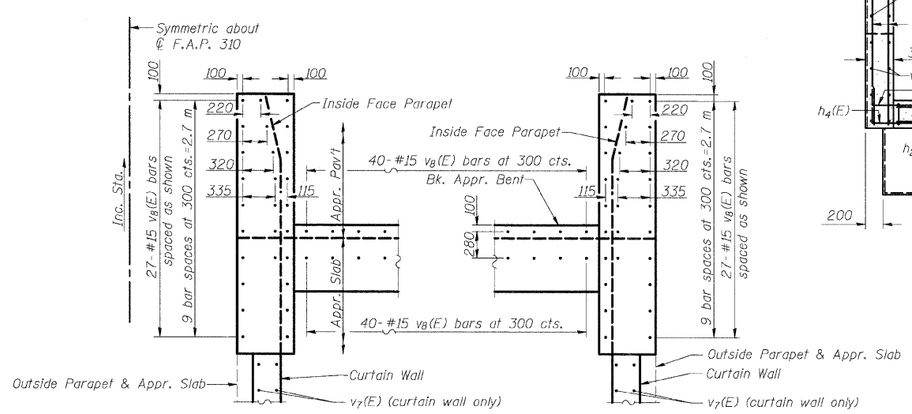

PLAN OF APPR. BENT
SHOWING $v_8(E)$ BAR SPACING
(N.B. Structure shown, S.B. Structure the same, but opposite hand)

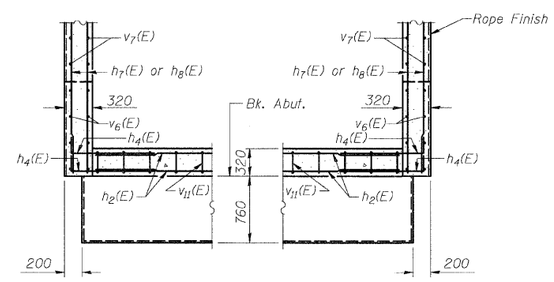

SECTION F-F

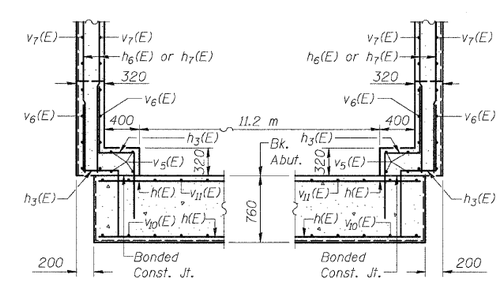

SECTION G-G

DESIGNED	ADL
CHECKED	WLW
DRAWN	ADL/DGM
CHECKED	WLW

NORTH ABUTMENTS (2 OF 2)
FAP RTE. 310 (IL RTE. 255) OVER
IL RTE 111
SECTION 60-15HB-2
MADISON COUNTY
STATION 39+914.647
SN 060-0330 (NB) & 060-0331 (SB)

Klingner & Assoc., P.C.

12/7/2007 1:44:08 PM
p:\00files\000024\dilli\bridge_plans\060-0330abutment.dgn