FAP ROUTE	SECTION	COUNTY	TOTAL SHEETS	SHEET NO
788	520-2-2	MADISON	173	124
STA.		TO STA.		
CONTRACT NO. 76633				

PROPOSED SIGNING

	LOCATION				DESCRIPTION		SIGN PANEL (SQ FT)			WOOD SUPPORT	METAL POST		BREAKAWAY WIDE FLANGE SIGN SUPPORT						CONCRETE FOUNDATIONS		
ALIGN	PROP. STA	RT/LT	OFFSET EOP TO EDGE OF SIGN	OFFSET CL TO CENTER OF SIGN SEE NOTE 3	TYPE SEE NOTE 2	LEGEND	TYPE 1 9 SF	TYPE 2 9X&X24	TYPE 3 24 SF	LIN FT	TYPE A LIN FT	NO. OF POSTS	POST TYPE AND SIZE	A	B	L1	L2	STRUCTURAL STEEL POUNDS	CONCRETE FOUNDATION CU YDS	REINFORCEMENT BARS POUNDS	NOTES
ABBOTT ST	30+40	LT		26'	R1-1-30 R1-I100-3018	STOP CROSS TRAFFIC DOES NOT STOP		10.1		16		1									SUPPLEMENTAL PLAQUE
ABBOTT ST	32+81	RT	6'		R1-1-30 R1-4-186	STOP ALL WAY	7.0			16		1									
ABBOTT ST	32+96	LT		48'	R1-1-30 R1-4-186	STOP ALL WAY	7.0			16		1									
ABBOTT ST	33+37	RT		41'	R1-1-30 R1-4-186	STOP ALL WAY	7.0			16		1									
ABBOTT ST	33+56	LT		33'	R1-4-186	ALL WAY	0.8														ADD ONTO EXISTING SIGN POST
RELOC. IL 3	775+50	LT		18'	R2-1-3036	SPEED LIMIT 35	7.5			17		1									
RELOC. IL 3	775+75	RT		18'	R2-1-3036	SPEED LIMIT 35	7.5			17		1									
RELOC. IL 3	778+00	LT	3'		W4-2-3030	RIGHT LANE ENDS SYMBOL	6.3			17		1									
RELOC. IL 3	778+30	LT	3'		R3-7-3030	RIGHT LANE MUST TURN RIGHT	6.3			17		1									
RELOC. IL 3	778+60	LT	3'		R2-1-3036	SPEED LIMIT 35	7.5			17		1									
ALLEY	SEE PLAN	CL		0'	R11-2-4830	ROAD CLOSED		10.0			24	2									
ALLEY	SEE PLAN	LT		4'	OM4-1	END-OF-ROADWAY MARKER	2.3				11	1									
ALLEY	SEE PLAN	RT		4'	OM4-1	END-OF-ROADWAY MARKER	2.3				11	1									
4TH ST	10+80	RT		24'	REL *100	RACE TRACK / ARROW				14		1									RELOCATED EXISTING SIGN NO. 100
4TH ST	10+60	LT	6'		R1-1-30 R1-I100-3018	STOP CROSS TRAFFIC DOES NOT STOP		10.1		16		1									
4TH ST	12+20	LT	18'		M1-I100-24 M2-1-2115	ILLINOIS 3 JCT	6.2			16		1									SUPPLEMENTAL PLAQUE
RELOC. IL 3	779+32	RT		220'	OM4-1	END-OF-ROADWAY MARKER	2.3				11	1									
RELOC. IL 3	780+43	RT	3'		R2-1-3036	SPEED LIMIT 35	7.5			17		1									
RELOC. IL 3	783+00	RT	3'		R3-I100	RIGHT TURN LANE	4.0			17		1									
RELOC. IL 3	784+15	MEDIAN		5' LT	R4-7-2430	KEEP RT	5.0			14		1									
RELOC. IL 3	784+75	LT	3'		R2-1-3036	SPEED LIMIT 35	7.5			17		1									
RELOC. IL 3	785+10	LT	3'		M1-I100-24 M3-3-2412	ILLINOIS 3 SOUTH	6.0			15		1									SUPPLEMENTAL PLAQUE
RELOC. IL 3	785+40	MEDIAN		5' LT	R4-7-2430	KEEP RT	5.0			14		1									
RELOC. IL 3	785+88	LT		65'	REL3-11	BROADWAY AVE/2ND ST		13.8		MAST ARM											DISTANCE IS TO CENTER OF MAST ARM FOUNDATION USE ZZ SIGN SHEETING
2ND ST	4+27	LT	3'		R12-1-2430	WEIGHT LIMIT 3 TONS	5.0			15		1									
2ND ST	8+43	LT	3'		R2-1-2430	SPEED LIMIT 20	5.0			15		1									
BROADWAY	12+33	RT	3'		R2-1-2430	SPEED LIMIT 30	5.0			15		1									
BROADWAY	12+60	LT	3'		R3-I100	RIGHT TURN LANE	4.0			15		1									
3RD ST	END OF RD	CL		0'	R11-2-4830	ROAD CLOSED		10.0			24	2									
3RD ST	END OF RD	LT		4'	OM4-1	END-OF-ROADWAY MARKER	2.3				11	1									
3RD ST	END OF RD	RT		4'	OM4-1	END-OF-ROADWAY MARKER	2.3				11	1									
LINCOLN	END OF RD	CL		0'	R11-2-4830	ROAD CLOSED		10.0			24	2									
LINCOLN	END OF RD	LT		4'	OM4-1	END-OF-ROADWAY MARKER	2.3				11	1									
LINCOLN	END OF RD	RT		4'	OM4-1	END-OF-ROADWAY MARKER	2.3				11	1									
LINCOLN	2+80	RT	3'		D4-9-1218	RESERVED PARKING / HANDICAPPED ONLY	1.5				12	1									
LINCOLN	4+57	LT	6'		W14-1-30	DEAD END	6.3			14		1									
LINCOLN	5+32	RT		33'	W14-1-30	DEAD END	6.3			14		1									
ALLEY	SEE PLAN	CL		0'	R11-2-4830	ROAD CLOSED		10.0			24	2									
ALLEY	SEE PLAN	LT		4'	OM4-1	END-OF-ROADWAY MARKER	2.3				11	1									
ALLEY	SEE PLAN	RT		4'	OM4-1	END-OF-ROADWAY MARKER	2.3				11	1									
ALLEY	SEE PLAN	CL		0'	R11-2-4830	ROAD CLOSED		10.0			24	2									
ALLEY	SEE PLAN	LT		4'	OM4-1	END-OF-ROADWAY MARKER	2.3				11	1									
ALLEY	SEE PLAN	RT		4'	OM4-1	END-OF-ROADWAY MARKER	2.3				11	1									
BROADWAY	SEE PLAN	RT		11	R11-2-4830	ROAD CLOSED		10.0			24	2									
BROADWAY	SEE PLAN	RT		7	OM4-1	END-OF-ROADWAY MARKER	2.3				11	1									
BROADWAY	SEE PLAN	RT		15	OM4-1	END-OF-ROADWAY MARKER	2.3				11	1									
BROADWAY	SEE PLAN	RT		22	R11-2-4830	ROAD CLOSED		10.0			24	2									
BROADWAY	SEE PLAN	RT		18	OM4-1	END-OF-ROADWAY MARKER	2.3				11	1									
BROADWAY	SEE PLAN	RT		26	OM4-1	END-OF-ROADWAY MARKER	2.3				11	1									
RELOC. IL 3	787+11	MEDIAN		5' RT	R4-7-2430	KEEP RT	5.0			14		1									
RELOC. IL 3	787+29	RT		62'	REL3-12	2ND ST/BROADWAY AVE		15.0		MAST ARM											DISTANCE IS TO CENTER OF MAST ARM FOUNDATION USE ZZ SIGN SHEETING
RELOC. IL 3	787+98	RT	18'		M1-I100-24 M3-1-2412	ILLINOIS 3 NORTH	6.0			15		1									SUPPLEMENTAL PLAQUE
RELOC. IL 3	788+50	RT	18'		R2-1-3036	SPEED LIMIT 35	7.5			16		1									
RELOC. IL 3	789+50	RT	18'		REL3-16b	ILLINOIS 3 NORTH/GRANITE CITY/ALTON/RIGHT LANE			165.0			2	W10X26	3'-0"	12'-0"	20'-3"	20'-9"	1222	2.5	196	SHOULDER MOUNT, USE ZZ SIGN SHEETING
RELOC. IL 3	790+00	MEDIAN		2'-5" RT	REL3-16a	McKINLEY BR/ST LOUIS/LT LANE			60.0			2	W6X15	1'-7"	6'-5"	15'-10"	16'-0"	552	1.4	156	SHOULDER MOUNT, USE ZZ SIGN SHEETING
TOTALS							184.1	119.0	225.0	422	345							1774.0	3.9	352.0	

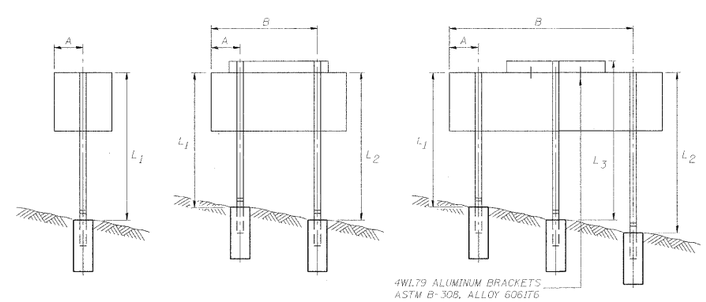

PROPOSED SHOULDER MOUNTED DETAIL

BREAKAWAY WIDE FLANGE STEEL POSTS

NOTES:
1. FOR LOCATION OF A, B, L1, AND L2 SEE PROPOSED SHOULDER MOUNTED DETAILS.
2. SIGN TYPE PER MUTCD STANDARD EXCEPT SIGNS DENOTED WITH REL3 WHICH ARE DETAILED ON SHEET 6 OF 8.
3. FOR SIGNS IN MEDIANS, ISLANDS, AND SIDE STREETS THE DISTANCE IS FROM CENTERLINE TO POST. SIGNS ON MAST ARMS ARE FROM THE CENTERLINE TO THE MAST ARM FOUNDATION.

SHEET 2 OF 8

ILLINOIS DEPARTMENT OF TRANSPORTATION

PROPOSED SIGN SCHEDULE

FAP ROUTE 788
SECTION 520-2-2
MADISON COUNTY

PLAN
NOTE BOOK NO.
SURVEYED
PLOTTED
RIGHT-OF-WAY CHECKED
F.A.D. FILE NAME
DATE
BY