ROUTE NO.	SECTION	COUNTY	TOTAL SHEETS	SHEET NO.
S.B.I. F.A.P. 310	*	MADISON	239	134
FED. ROAD DIST. NO. 7		ILLINOIS	FED. AID PROJECT-	

SHEET NO. 12
48 SHEETS

* 60-15HB-1 CONTRACT NO. 76635

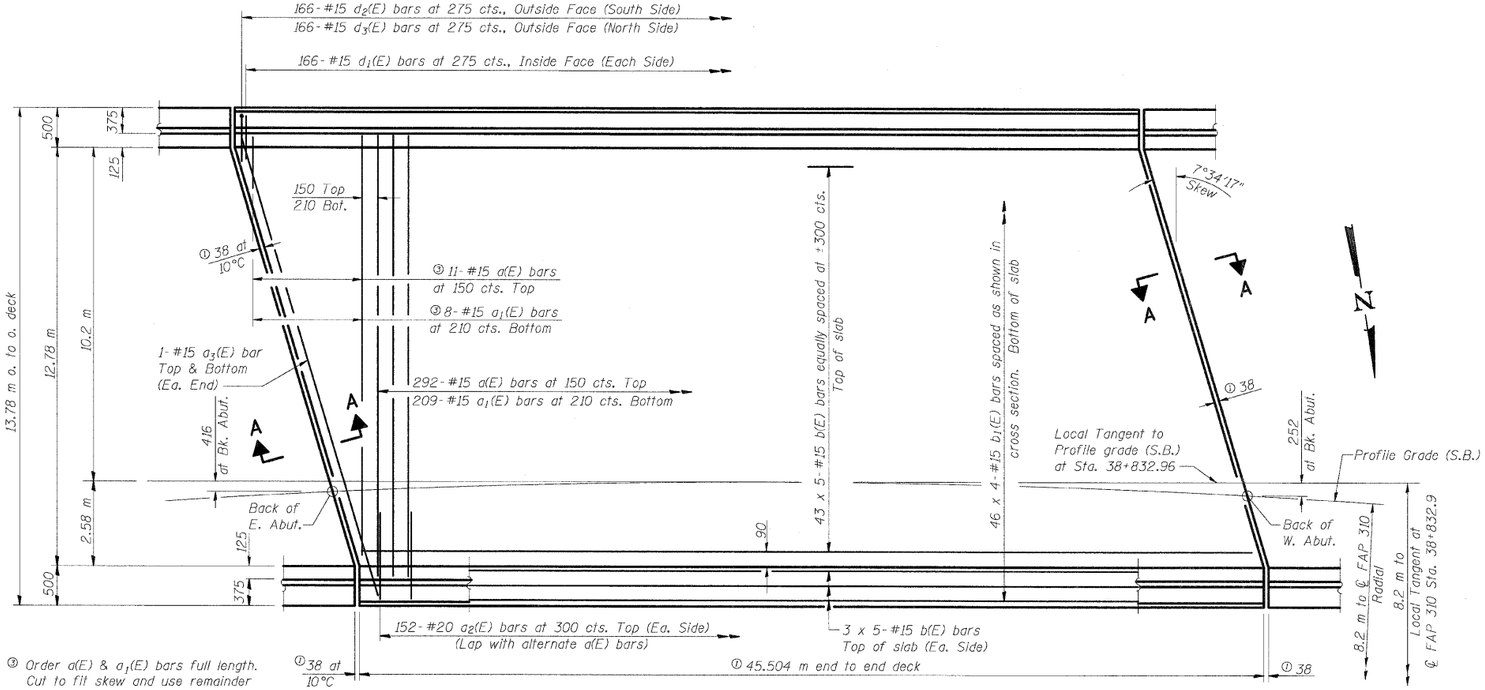

③ Order a(E) & a_1(E) bars full length. Cut to fit skew and use remainder of bars in opposite end.

PLAN

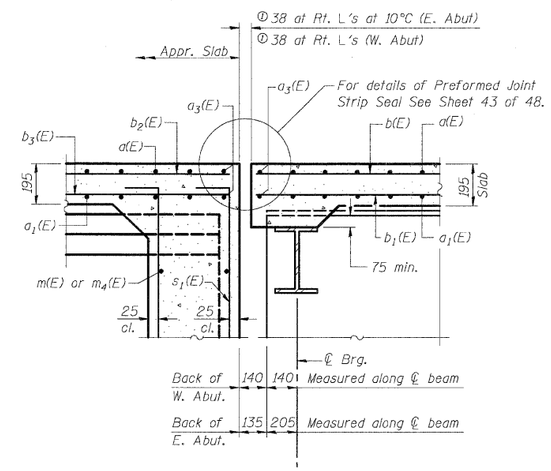

SECTION A-A

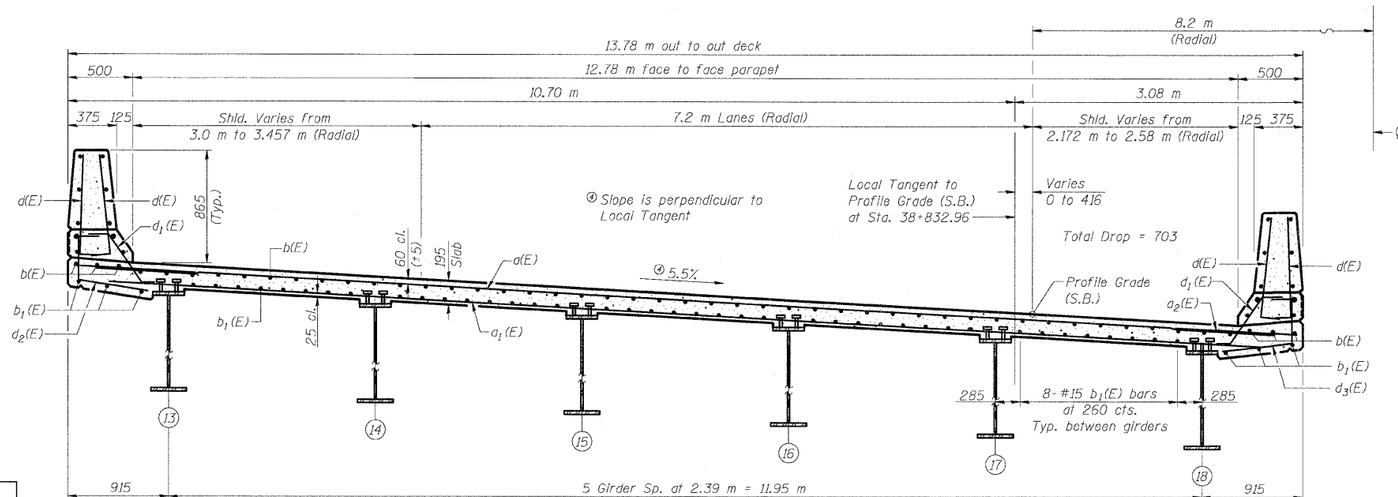

CROSS SECTION

(Looking West)

Notes: See Sheet 13 of 48 for superstructure details and Bill of Materials. Reinforcement bars designated (E) shall be epoxy coated.

Bars indicated thus 20 x 3-#15 etc. indicates 20 lines of bars with 3 lengths per line.

See Sheet 13 of 48 for parapet reinforcement.

① Dimensions are based on a Rolled Rail Strip Seal Joint. If the contractor elects to use the Welded Rail Strip Seal Joint, deck dimensions may require adjustments to satisfy the details on Sheet 43 of 48.

Bars in Appr. Slab are billed with Appr. Slab.

Min. Lap
#15 bars = 640

DESIGNED	ADL
CHECKED	WLW
DRAWN	ADL/DGM
CHECKED	WLW

S.B. SUPERSTRUCTURE
FAP RTE. 310 (IL RTE. 255) OVER
CH ROUTE 4 (HUMBERT ROAD)
SECTION 60-15HB-1
MADISON COUNTY
STATION 38+829.909
SN 060-0308 (NB) & 060-0309 (SB)

Klingner & Assoc., P.C.

12/10/2007 12:00:35 PM

p:\00files\000024\dhumbert-bridge\bridge_plans\060-0308superstructures.dgn