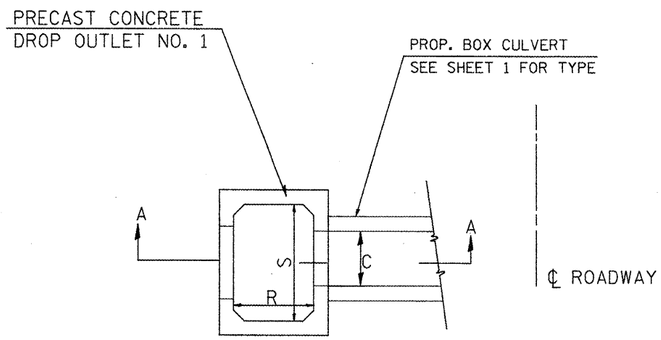

PLAN

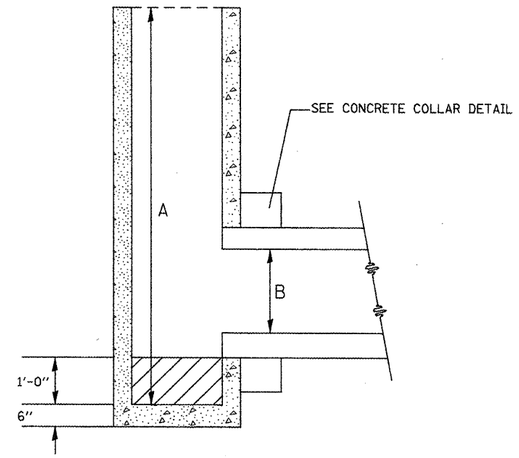

SECTION A-A

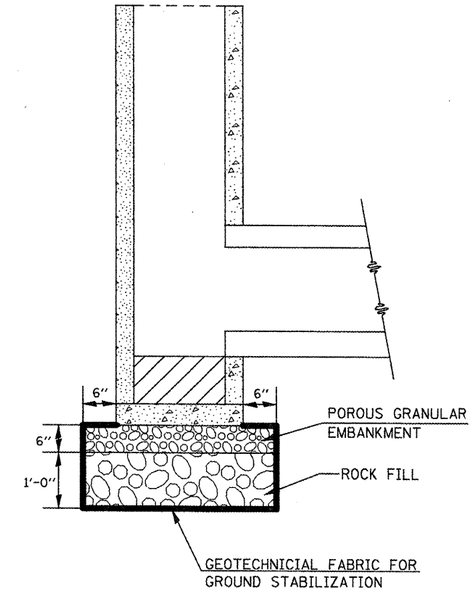

UNDERCUT TREATMENT

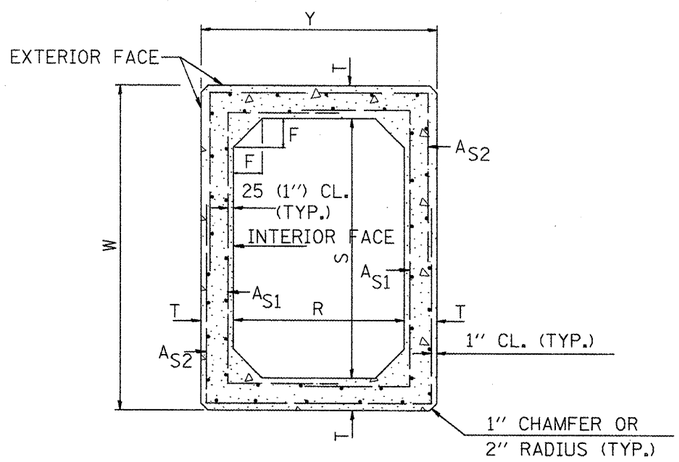

SECTION THRU DROP BOX

DIMENSIONS

S x R	T	W	Y	F	A_{S1}	A_{S2}
3' X 3'	6"	4'-0"	4'-0"	4"	0.10	0.10
4' X 4'	6"	5'-0"	5'-0"	5"	0.12	0.12
5' X 5'	6"	6'-0"	6'-0"	6"	0.14	0.14

NOTE:

1. THE BOTTOM OF THE DROP BOX SHALL BE FILLED WITH 1 FT. OF CONCRETE, WHICH SHALL BE 1 FT. BELOW THE FLOWLINE OF THE PROPOSED BOX CULVERT. THE WORK AND MATERIAL SHALL BE INCLUDED IN THE COST OF THE DROP BOX.
2. THE TERMS AS1 & AS2 DENOTES THE MINIMUM REQUIRED STEEL AREAS FOR REINFORCEMENT AS SPECIFIED IN ASTM C 789. REINFORCEMENT SHALL BE WELDED WIRE FABRIC CONFORMING TO ASTM SPECIFICATION A185.
3. THIS WORK SHALL BE PERFORMED IN ACCORDANCE WITH SECTION 503 OF THE STANDARD SPECIFICATION.

LOCATION	DROP BOX NO.	DROP BOX SIZE	BOX CULV. SIZE	A	ROCK FILL	POROUS GRANULAR EMBANKMENT	GEOTECH. FABRIC	REMOVAL OF UNSUITABLE MATERIAL	PIPE HANDRAIL
		S X R	B X C	FEET	TON	TON	SQ YD	CU YD	FOOT
RT. STA. 112+47.07	2	4' X 4'	3' X 3'	5'-4"	2.7	1.4	4.0	2.0	18
RT. STA. 153+74.76	3	5' X 5'	4' X 4'	7'-1/2'	3.4	1.7	5.4	2.7	22
RT. STA. 178+23.90	4	4' X 4'	3' X 3'	5'-7"	2.4	1.2	4.0	2.0	18
RT. STA. 184+00.12	5	3' X 3'	2' X 2'	4'-0"	1.6	0.8	2.8	1.4	FRAME & GRATE*
RT. STA. 221+24.61	6	3' X 3'	18" DIA	3'-6"	1.6	0.8	2.8	1.4	14

*FRAME AND GRATE USED SHALL BE ACCORDING TO HIGHWAY STD. 542546
THE FRAME AND GRATE SHALL BE INCLUDED IN THE COST OF DROP BOX NO. 5.

DRAWING NOT TO SCALE

FILE NAME = d-aindetail.dgn	USER NAME = ghidinaam	DESIGNED -	REVISED -
		DRAWN -	REVISED -
	PLOT SCALE = 100.0000 ' / IN.	CHECKED -	REVISED -
	PLOT DATE = 1/20/2009	DATE -	REVISED -

STATE OF ILLINOIS
DEPARTMENT OF TRANSPORTATION

DROP BOX # 2-6 DETAIL

SCALE: | SHEET NO. OF SHEETS | STA. TO STA.

F.A.P RTE.	SECTION	COUNTY	TOTAL SHEETS	SHEET NO.
665	(136,137)W&RS-3(136)109BR-1	HENDERSON		147

CONTRACT NO. 88773

ILLINOIS FED. AID PROJECT