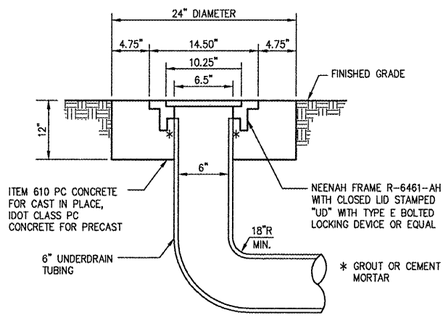

UNDERDRAIN CLEANOUT

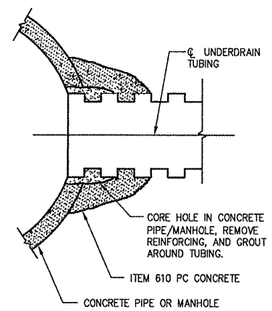

STORM SEWER CONCRETE COLLAR AND GROUT CONNECTION

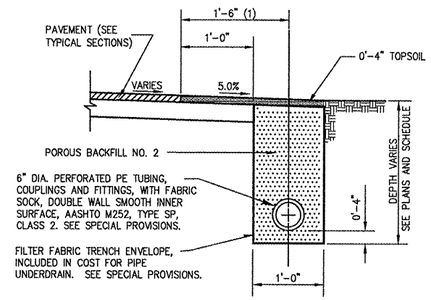

UNDERDRAIN ALONG PAVEMENT EDGE

DETAILS SHOWN ARE NOT TO SCALE

LE040

HANSON

HANSON PROFESSIONAL SERVICES INC.

815 Commerce Drive, Suite 200
Oak Brook, Illinois 60523
Telephone: 630.990.3800
Fax: 630.990.3801

Illinois Professional Design Firm
Registration No. 184-001084

© Copyright Hanson Professional Service Inc. 2008

Chicago-Romeoville Airport

JOLIET REGIONAL PORT DISTRICT

1 George Michas Drive
Romeoville, Illinois 60446
Telephone: 815.838.9497
Fax: 815.838.9524

COMPLETE TAXIWAY G

AIP PROJECT NO. 3-17-0140-B43
IDA PROJECT NO. LOT-3883

No.	Drawing Issue Description	Date	By

Date
JANUARY 30, 2009

Sheet Title
UNDERDRAIN DETAILS

08A0122
Project Number

LDH 06/27/08
Layout By Date

LDH 06/27/08
Designed By Date

RMH 01/30/09
Reviewed By Date

LDH --- | ---
Drawn By

13
Sheet No.

I:\08JOBS\08940\08A0122\DRAWINGS\SHEETS\1J-UNDERDRAIN DETAILS.DWG FEB 27, 2009 11:02AM HAUSMOR82