QUAD CITY INTERNATIONAL AIRPORT
TAXIWAY P, PHASE II – MIDDLE PAVING
ILL. MLI-3854, QU008
SHEET 53 OF 82

GROOVING PLAN

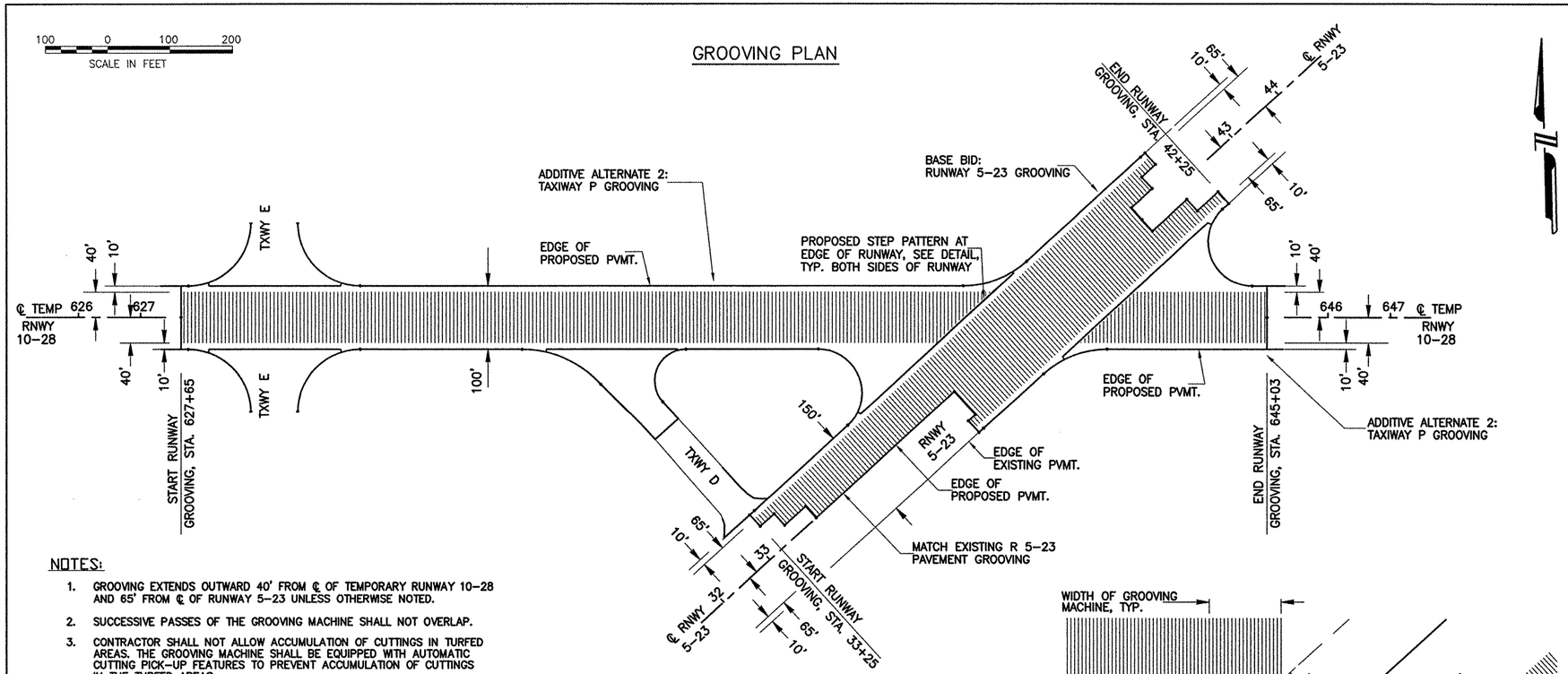

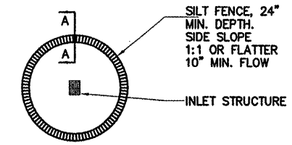

TEMPORARY SEDIMENT TRAP
AT ALL INLET STRUCTURES

NOTES:

1. GROOVING EXTENDS OUTWARD 40' FROM ℄ OF TEMPORARY RUNWAY 10-28 AND 65' FROM ℄ OF RUNWAY 5-23 UNLESS OTHERWISE NOTED.
2. SUCCESSIVE PASSES OF THE GROOVING MACHINE SHALL NOT OVERLAP.
3. CONTRACTOR SHALL NOT ALLOW ACCUMULATION OF CUTTINGS IN TURFED AREAS. THE GROOVING MACHINE SHALL BE EQUIPPED WITH AUTOMATIC CUTTING PICK-UP FEATURES TO PREVENT ACCUMULATION OF CUTTINGS IN THE TURFED AREAS.
4. GROOVING SHALL BE COMPLETED PRIOR TO THE INSTALLATION OF NEOPRENE COMPRESSION SEALS IN THE LONGITUDINAL JOINTS.
5. CONTRACTOR SHALL REPLACE AND / OR RE-SEAL ALL EXISTING JOINTS THAT ARE DAMAGED BY THE PAVEMENT GROOVING OPERATIONS. COSTS TO BE INCLUDED IN THE CONTRACT UNIT PRICE FOR PAVEMENT.
6. GROOVES SHALL BE SAWED NO LESS THAN 6 INCHES AND NO MORE THAN 18 INCHES FROM PORPOSED OR FUTURE IN-PAVEMENT LIGHT FIXTURES.
7. THE RUNWAY 5-23 GROOVES SHALL EXTEND ACROSS THE INTERSECTION OF RUNWAY 5-23 / TAXIWAY P. THE TAXIWAY P GROOVES SHALL BE CUT IN A STEP PATTERN AS SHOWN ABOVE.
8. BOTH PCC PAVEMENT GROOVING AND BITUMINOUS PAVEMENT GROOVING SHALL BE MEASURED AND PAID FOR UNDER CONTARCT ITEM 501540.
9. MATCH SPACING OF THE EXISTING GROOVES ON RUNWAY 5-23.
10. THE RUNWAY 5-23 GROOVING SHALL BE MEASURED AND PAID FOR UNDER CONTRACT ITEM AR501540. THE TAXIWAY P GROOVING, IF AWARDED, SHALL BE MEASURED AND PAID FOR UNDER CONTARCT ITEM AS501540.

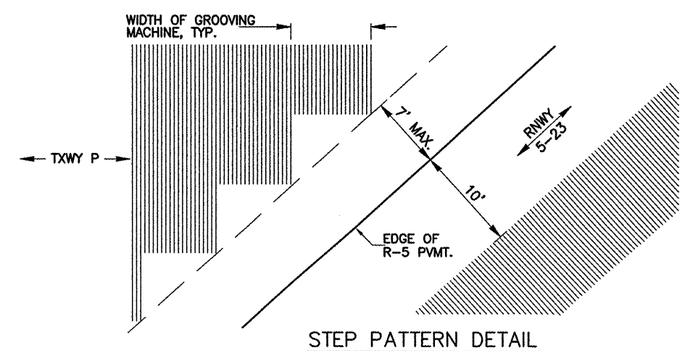

STEP PATTERN DETAIL

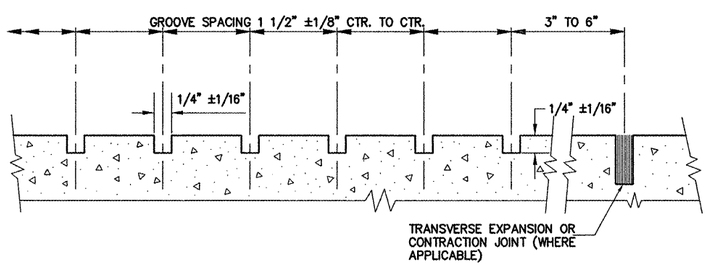

GROOVE DIMENSIONS
N.T.S.

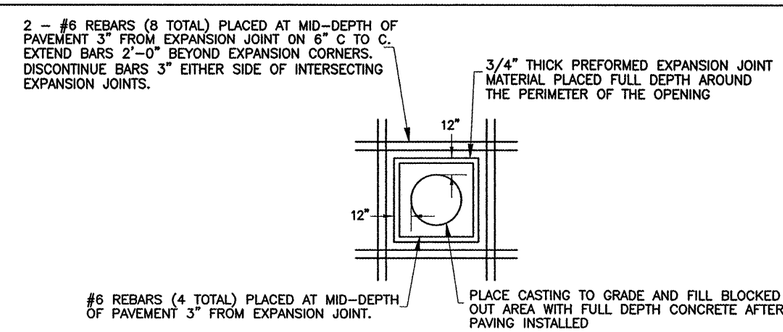

PAVEMENT SQUARE BLOCKOUT
FOR CIRCULAR CASTING
NO SCALE

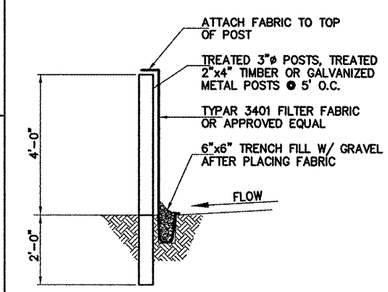

SECTION A-A
SILT FENCE DETAIL
NOT TO SCALE

G:\Airport\A08T032 TP MID PVMT\MISC.dwg, 4/1/2009 8:32:10 AM, jeffm