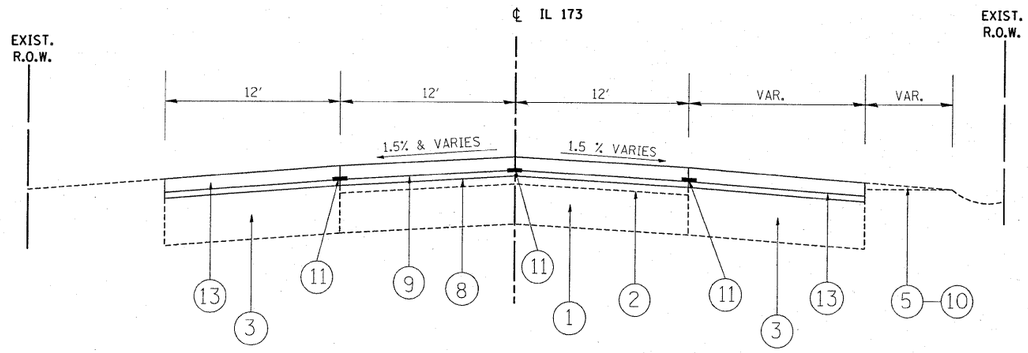

PROPOSED TYPICAL SECTION IL 173
STA. 94+00 TO STA. 94+51.02

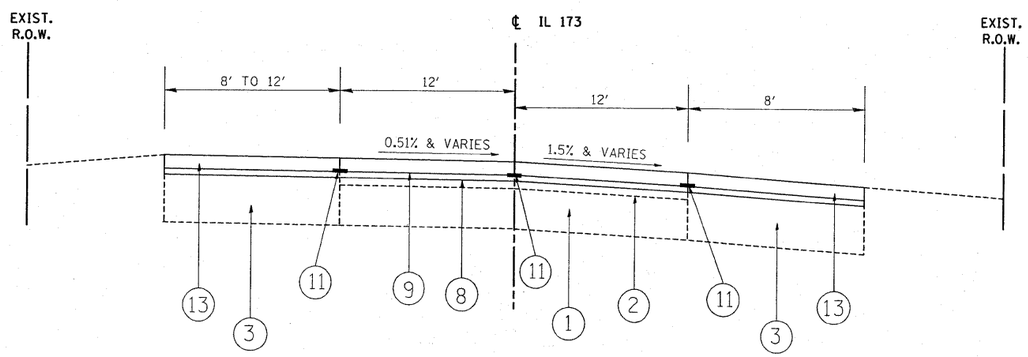

PROPOSED TYPICAL SECTION IL 173
STA. 94+93.96 TO STA. 95+00

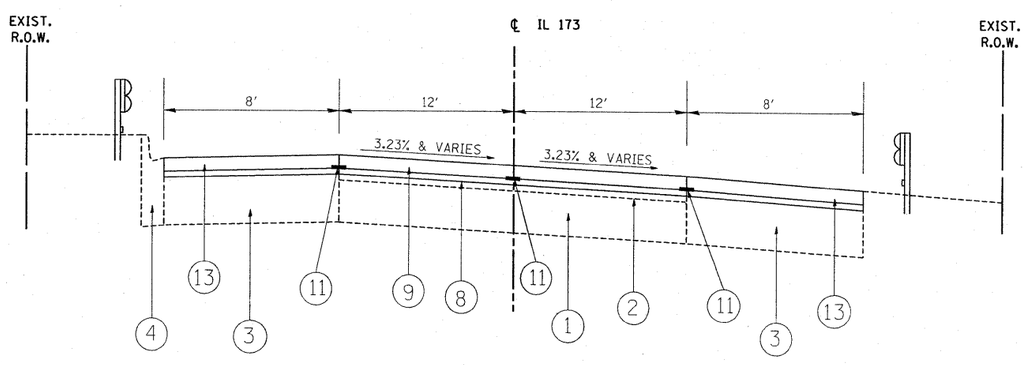

PROPOSED TYPICAL SECTION IL 173
STA. 95+72.92 TO STA. 107+00

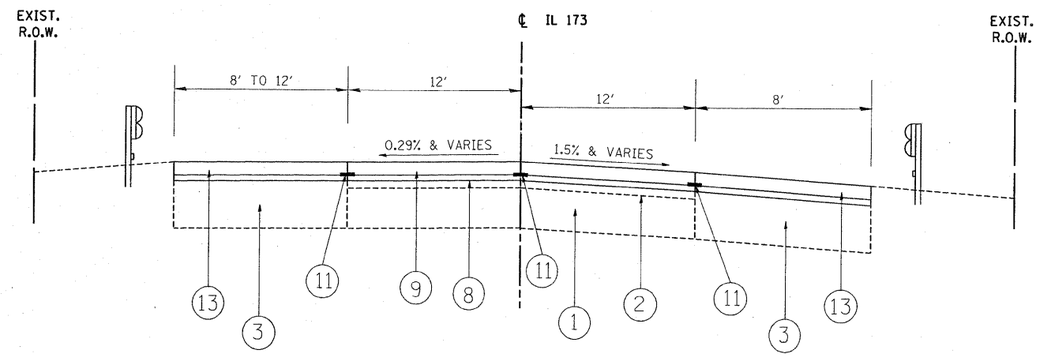

PROPOSED TYPICAL SECTION IL 173
STA. 108+00 TO STA. 109+00

LEGEND:

1. EXISTING P.C.C. PAVEMENT, 8″ (±)
2. EXISTING HMA OVERLAY, 6″ (±)
3. EXISTING HMA SHOULDERS
4. EXISTING COMBINATION CONCRETE CURB & GUTTER, TYPE B-6.24
5. EXISTING AGGREGATE SHOULDERS
6. EXISTING AGGREGATE SIDEWALK
7. PROPOSED HMA SURFACE REMOVAL, 2 1/2″ (FOR BRIDGE, USE 2″)
8. PROPOSED LEVELING BINDER (MACHINE METHOD) N70, 3/4 ″
9. PROPOSED POLYMERIZED HMA SURFACE COURSE, MIX ″F″, N90, 1 3/4 ″ (FOR BRIDGE, USE 2″)
10. PROPOSED AGGREGATE WEDGE SHOULDER, TYPE B
11. PROPOSED STRIP REFLECTIVE CRACK CONTROL TREATMENT

• 12. PROPOSED HMA SURFACE REMOVAL, 1″

• 13. PROPOSED HMA SURFACE COURSE, MIX ″D″ N70, 1-1/2″ & VARIES

• APPLIES ONLY TO HMA SHOULDER

FILE NAME = c:\projects\d101108\design_aa.dgn	USER NAME = galbannb	DESIGNED -	REVISED -	STATE OF ILLINOIS DEPARTMENT OF TRANSPORTATION	IL 173 (LAKE AVENUE TO ORCHARD STREET) PROPOSED TYPICAL SECTIONS	F.A.P RTE.	SECTION	COUNTY	TOTAL SHEETS / SHEET NO.
		DRAWN -	REVISED -			303	2007-049-1	LAKE	49 / 6
	PLOT SCALE = 50.0000 ′ / IN.	CHECKED -	REVISED -					CONTRACT NO. 60D39	
	PLOT DATE = 2/25/2008	DATE -	REVISED -		SCALE: N.T.S. / SHEET NO. 6 OF 25 SHEETS / STA. / TO STA.	FED. ROAD DIST. NO. 1	ILLINOIS	FED. AID PROJECT	